Exploration Life Support Baseline Values and Assumptions Document

Editor:

Anthony J. Hanford, Ph.D.
Engineering and Science Contract Group
Houston, Texas 77058

Responsible National Aeronautics and Space Administration Official:

Michael K. Ewert
Johnson Space Center
Houston, Texas 77058

August 2006 *NASA CR-2006-213693*

CONTENTS

Section Page

1 Introduction 1
1.1 Purpose and Process 1
1.2 Advantages 2
1.3 Systems Integration, Modeling, and Analysis Element 2
1.4 Acknowledgement 3
2 Approach 4
2.1 Development 4
2.2 Context 4
2.3 Background 4
2.3.1 Equivalent System Mass Description 4
2.3.2 Definition of Infrastructure 4
2.3.3 Definition of Modeling 5
2.3.4 Units and Values 5
2.4 Life Support Subsystems Within the Exploration Life Support Project 5
2.5 Mission Duration 8
2.6 Applicable Documents 18
3 Overall Assumptions 19
3.1 Missions 19
3.1.1 Typical Values for Exploration Missions 19
3.1.2 Long-Term Extraterrestrial Bases 20
3.2 Infrastructure Costs and Equivalencies 21
3.2.1 Infrastructure Costs based upon the Exploration Systems Architecture Study 23
3.2.2 Pressurized Volume or Primary Structure Costs 24
3.2.3 Secondary Structure Costs 27
3.2.4 Power Costs 28
3.2.5 Thermal Control Costs 36
3.2.6 Crewtime Costs 38
3.2.7 Location Factors 38
3.3 Crew Characteristics 40
3.3.1 Crew Metabolic Rate 40
3.3.1.1 General Metabolic Rates 40
3.3.1.2 Exploration Metabolic Loads 41
3.3.2 Crewtime Estimates 43
3.3.3 Nominal Human Interfaces 46
4 Life Support Subsystem Assumptions and Values 48
4.1 Air Subsystem 48
4.1.1 Design Values for Atmospheric Systems 48
4.1.2 Gas Storage 51
4.2 Habitation Subsystem 51
4.2.1 Clothing 51

CONTENTS

Section Page

4.3 Waste Subsystem 53
4.3.1 Historical Data on Skylab 54
4.3.2 Historical Waste Loads from Space Transportation System Missions....54
4.3.3 Solid Waste Management for the International Space Station Mission 56
4.3.4 Solid Waste Management for Future Long-Duration Missions 63
4.3.4.1 Feces 65
4.3.4.2 Urine 65
4.3.4.3 Menstruation 66
4.3.4.4 Toilet Paper....66
4.3.4.5 Miscellaneous Body Wastes 67
4.3.4.6 Consumable Hygiene Products 67
4.3.4.7 Food Packaging, Inedible Biomass, and Wasted Food 68
4.3.4.8 Paper, Tape, Miscellaneous Hygiene Products, and Clothing 69
4.3.4.9 Greywater and Brine 70
4.3.4.10 Other Waste Streams....70
4.4 Water Subsystem 72
4.4.1 Design Values for Water Subsystems 72
4.4.2 Wastewater Component Contaminant Loading 75
4.4.3 Wastewater and Intermediate Water System Solution Formulations for Testing 81
5 Life Support External Interface Assumptions and Values....82
5.1 Extravehicular Activity Support External Interface 82
5.1.1 Operations During Transit to Mars 83
5.1.2 Martian Surface Operations 84
5.1.3 Lunar Surface Operations 85
5.2 Food External Interface....86
5.2.1 Physical Parameters for Historical Food Flight Systems 86
5.2.2 Physical Parameters of Refrigeration Equipment 88
5.2.3 Crewtime for the Food Subsystem....89
5.2.4 Food Subsystem Waste Generation 90
5.2.5 Overall Food Subsystem Parameters....90
5.2.6 Food Subsystem Based on Bulk Packaging 90
5.2.6.1 Commodities....91
5.2.6.2 Equipment....96
5.2.6.3 Crewtime....98
5.2.6.4 Nutrition....99
5.2.7 Food Subsystems Based on Biomass Production Systems....100
5.2.8 Food Processing 107
5.2.9 Biomass Production 107
5.2.9.1 Plant Growth Chambers....107
5.2.9.2 Plant Values 112
5.2.9.3 Modified Energy Cascade Models for Crop Growth 119
5.2.9.4 Modified Energy Cascade Models for Crop Biomass Production 119
5.2.9.5 Modified Energy Cascade Models for Crop Transpiration....125
5.3 In-Situ Resource Utilization External Interface....132
5.4 Integrated Control External Interface....134
5.4.1 Sensors 134
5.5 Power External Interface....134
5.6 Radiation Protection External Interface 135

CONTENTS

Section Page

5.7 Thermal Control External Interface 135
5.7.1 Heat Transfer Mechanisms 135
5.7.1.1 Conduction 135
5.7.1.2 Convection 136
5.7.1.3 Radiation 136
5.7.1.4 Heat Transfer with Phase Change 136
5.7.2 Thermal Control Organization 136
5.7.2.1 Passive and Active Thermal Control 137
5.7.2.2 General Thermal Control Architecture 137
5.7.3 Thermal Control Technology 140
5.7.3.1 Historical Thermal Control Approaches 140
5.7.3.2 Advanced Thermal Control Approaches 142
5.7.4 Radiant Energy Balance 143
5.7.5 Thermal Control Values 144
6 References 148
7 Appendices 162
7.1 Appendix A: Acronyms and Abbreviations 162
7.2 Appendix B: Abbreviations for Units 163
7.3 Appendix C: Life Support Equipment Parameters from the Advanced Life Support Database 164
7.3.1 International Space Station 164
7.3.2 Spacelab 170
7.3.3 Space Shuttle Program 172

TABLES

Table		Page
Table 2.4.1	Exploration Life Support Subsystem Descriptions and Interfaces	6
Table 2.4.2	Exploration Life Support External Interfaces Descriptions and Interfaces	7
Table 2.5.1	Overall Description of Mission Duration and Life Support System Functionality	10
Table 2.5.2	Functionality and Possible Options for the Air Subsystem	12
Table 2.5.3	Functionality and Possible Options for the Habitation Subsystem	14
Table 2.5.4	Functionality and Possible Options for the Waste Subsystem	15
Table 2.5.5	Functionality and Possible Options for the Water Subsystem	16
Table 3.1.1	Mission Assumptions	20
Table 3.2.1	Long-Duration Luna Mission Infrastructure Costs	22
Table 3.2.2	Mars Mission Infrastructure Costs	22
Table 3.2.3	Lunar Outpost Mission Infrastructure Costs	23
Table 3.2.4	Cost of Pressurized Volume	24
Table 3.2.5	Masses of Inflatable Shell Components	25
Table 3.2.6	Estimated Masses and Volume-Mass Penalties for Inflatable Module Configurations	26
Table 3.2.7	Estimated Masses for Inflatable Modules	27
Table 3.2.8	Secondary Structure Masses	28
Table 3.2.9	Power Module Characteristics for Nuclear Reactor Proposals	30
Table 3.2.10	Technologies Needed for Critical Capabilities	31
Table 3.2.11	Power Option Summary	32
Table 3.2.12	Characteristics of Advanced Rechargeable Batteries	36
Table 3.2.13	Advanced Fuel Cell Systems	36
Table 3.2.14	Advanced Mission Thermal Control Costs and Equivalencies	37
Table 3.2.15	Location Factors for Near-Term Missions	39
Table 3.3.1	Crewmember Mass Limits	40
Table 3.3.2	Human Metabolic Rates	40
Table 3.3.3	Crew Induced Metabolic Loads – SI Units	42
Table 3.3.4	Crew Induced Metabolic Loads – English Units	42
Table 3.3.5	Time Allocation for a Nominal Crew Schedule in a Weightless Environment	43
Table 3.3.6	Crewtime per Crewmember per Week	44
Table 3.3.7	Crewtime-Mass Penalty Values Based Upon the Fiscal Year 2005 Advanced Life Support Research and Technology Development Metric	45
Table 3.3.8	Summary of Nominal Human Metabolic Interface Values	47
Table 4.1.1	Typical Steady-State Values for Vehicle Atmospheres	48
Table 4.1.2	Model for Trace Contaminant Generation from Human Metabolism	49
Table 4.1.3	Model for Trace Contaminant Generation from Cabin Equipment	50
Table 4.1.4	Gas Storage	51
Table 4.2.1	Clothing and Laundry Options	52
Table 4.2.2	Early ISS Laundry Equipment Specifications	52
Table 4.2.3	Advanced Washer/Dryer Specifications	53

TABLES

Table		Page
Table 4.3.1	Waste Analysis for STS-51D Trash	55
Table 4.3.2	Space Transportation System Crew Provision Wastes from Past Missions	56
Table 4.3.3	International Space Station Reference Mission Vehicle Wastes	57
Table 4.3.4	Advanced Mars Exploration Reference Mission Vehicle Wastes	60
Table 4.3.5	Summary Information on Wastes for Developing Waste Models for Future Long-Duration Missions	64
Table 4.3.6	Information on Feces	65
Table 4.3.7	Information on Urine	66
Table 4.3.8	Information on Menstruation	66
Table 4.3.9	Information on Toilet Paper	67
Table 4.3.10	Information on Miscellaneous Body Wastes	67
Table 4.3.11	Information on Consumable Hygiene Products	68
Table 4.3.12	Information on Food Packaging, Inedible Biomass, and Wasted Food	69
Table 4.3.13	Information on Paper, Tape, Miscellaneous Hygiene Products, and Clothing	70
Table 4.3.14	Information on Other Waste Streams	71
Table 4.4.1	Steady-State Values for Vehicle Water Usage for Short Duration Missions	72
Table 4.4.2	Typical Steady-State Water Usage Rates for Various Missions	73
Table 4.4.3	Typical Steady-State Wastewater Generation Rates for Various Missions	74
Table 4.4.4	Wastewater Contaminants in Extravehicular Mobility Unit Stream	75
Table 4.4.5	Wastewater Contaminants in Crew Latent Condensate	76
Table 4.4.6	Wastewater Contaminants in Crew Shower Stream	77
Table 4.4.7	Wastewater Contaminants in Crew Hygiene Stream	78
Table 4.4.8	Wastewater Contaminants in Crew Urine Stream	79
Table 4.4.9	Wastewater Contaminants in Animal Latent Condensate	80
Table 5.1.1	Local Accelerations Due to Gravity	82
Table 5.1.2	Historical Extravehicular Activity Masses	83
Table 5.1.3	Weights of Historical Spacesuits Under Gravitational Loadings	83
Table 5.1.4	Summary of Extravehicular Activity Values for Mars Surface Operations	85
Table 5.1.5	Extravehicular Activity Metabolic Loads	85
Table 5.2.1	Historical and Near-Term Food Subsystem Masses	87
Table 5.2.2	International Space Station Refrigerator / Freezer Properties	88
Table 5.2.3	Frozen Food Storage on a Property per Frozen-Food-Mass Basis	89
Table 5.2.4	Food Quantity and Packaging	90
Table 5.2.5	Ingredients, Commodity Sources, and Yield Values on a Per-Crewmember Per-Day Basis for 10-Day, Bulk-Commodity Menu	92
Table 5.2.6	Mechanical Processor Characteristics for 10-Day Bulk Commodity Menu	96
Table 5.2.7	Food Preparation Equipment for 10-Day Bulk Commodity Menu	97
Table 5.2.8	Crewtime Requirements for 10-Day Bulk Commodity Menu	98
Table 5.2.9	Ingredient Processing Equipment Crewtime Values for Each 10-Day Menu Cycle	99
Table 5.2.10	Nutrient Values for 10-Day Bulk-Packaged Food Menu	100
Table 5.2.11	Menu Masses for Diets Using Advanced Life Support Crops and Resupplied Foods	101
Table 5.2.12	Nutritional Content of Diets Using Advanced Life Support Crops and Resupplied Foods	102
Table 5.2.13	Properties of Early Mars Diets for Intravehicular Activities Using Resupplied Foods	103
Table 5.2.14	Nutritional Content of Early Mars Diets for Intravehicular Activities Using Resupplied Foods	104
Table 5.2.15	Menu Masses for Diets Using Advanced Life Support Crops and Resupplied Foods	105
Table 5.2.16	Nutritional Content of Diets Using Advanced Life Support Crops and Resupplied Foods	106
Table 5.2.17	Updated ELS Salad Crop Only Dietary Contributions	107
Table 5.2.18	Overall Crops Masses for Updated Salad Crop Only Diet	107

TABLES

Table Page

Table 5.2.19 Lighting Data....108
Table 5.2.20 High Pressure Sodium Lighting Data....109
Table 5.2.21 Plant Growth Chamber Equivalent System Mass per Growing Area....110
Table 5.2.22 Physical Parameters for the First Biomass Production Chamber in BIO-Plex....111
Table 5.2.23 Growing Area Dimensions for the First BIO-Plex Biomass Production Chamber....112
Table 5.2.24 Exploration Life Support Cultivars, Intended Usage, and Environmental Growth Conditions....113
Table 5.2.25 Overall Physical Properties at Maturity for Nominal Crops....114
Table 5.2.26 Nominal and Highest Biomass Production, Composition, and Metabolic Products....115
Table 5.2.27 Inedible Biomass Generation for Exploration Life Support Diets Based on Fresh Weights....116
Table 5.2.28 Plant Growth and Support Requirements per Dry Biomass....117
Table 5.2.29 Composition of Initial Nutrient Solution....118
Table 5.2.30 Composition of Replenishment Nutrient Solution....118
Table 5.2.31 Values for the Exponent n in MEC Models....119
Table 5.2.32 Summary of Modified Energy Cascade Model Variables for Biomass Production....121
Table 5.2.33 Biomass Production Model Constants....122
Table 5.2.34 Format for Tables of Coefficients for Equations Employing Multivariable Polynomial Regression Fits....123
Table 5.2.35 Maximum Canopy Quantum Yield, CQY_{MAX}, Coefficients for Dry Bean....123
Table 5.2.36 Maximum Canopy Quantum Yield, CQY_{MAX}, Coefficients for Lettuce....123
Table 5.2.37 Maximum Canopy Quantum Yield, CQY_{MAX}, Coefficients for Peanut....123
Table 5.2.38 Maximum Canopy Quantum Yield, CQY_{MAX}, Coefficients for Rice....124
Table 5.2.39 Maximum Canopy Quantum Yield, CQY_{MAX}, Coefficients for Soybean....124
Table 5.2.40 Maximum Canopy Quantum Yield, CQY_{MAX}, Coefficients for Sweet Potato....124
Table 5.2.41 Maximum Canopy Quantum Yield, CQY_{MAX}, Coefficients for Tomato....124
Table 5.2.42 Maximum Canopy Quantum Yield, CQY_{MAX}, Coefficients for Wheat....124
Table 5.2.43 Maximum Canopy Quantum Yield, CQY_{MAX}, Coefficients for White Potato....125
Table 5.2.44 Summary of Modified Energy Cascade Model Variables for Canopy Transpiration....126
Table 5.2.45 Nominal Temperature Regimes, Planting Densities, and Photoperiods for the Plant Growth and Transpiration Models....128
Table 5.2.46 Biomass Production Model Time Constants for Nominal Temperature Regime and Photoperiod....128
Table 5.2.47 Biomass Carbon and Oxygen Production Fractions for Nominal Temperature Regime and Photoperiod....129
Table 5.2.48 Canopy Closure Time, t_A, Coefficients for Dry Bean with Nominal Conditions....129
Table 5.2.49 Canopy Closure Time, t_A, Coefficients for Lettuce with Nominal Conditions....130
Table 5.2.50 Canopy Closure Time, t_A, Coefficients for Peanut with Nominal Conditions....130
Table 5.2.51 Canopy Closure Time, t_A, Coefficients for Rice with Nominal Conditions....130
Table 5.2.52 Canopy Closure Time, t_A, Coefficients for Soybean with Nominal Conditions....130
Table 5.2.53 Canopy Closure Time, t_A, Coefficients for Sweet Potato with Nominal Conditions....130
Table 5.2.54 Canopy Closure Time, t_A, Coefficients for Tomato with Nominal Conditions....131
Table 5.2.55 Canopy Closure Time, t_A, Coefficients for Wheat with Nominal Conditions....131
Table 5.2.56 Canopy Closure Time, t_A, Coefficients for White Potato with Nominal Conditions....131
Table 5.2.57 MEC Model Parameters for Low-Light Conditions, Nominal Temperature Regimes....132
Table 5.3.1 Nitrogen Gas Losses Associated with International Space Station Technology....133
Table 5.3.2 Nitrogen Gas Losses for the Mars Design Reference Mission (One Cycle) Using ISS Technologies....133
Table 5.3.3 Estimation of Cost Leverages from In-Situ Resource Utilization....134
Table 5.4.1 Sensor Mass Estimates....134

TABLES

Table Page

Table 5.7.1 Surface Optical Properties for Common Exterior Space Material....145
Table 5.7.2 Crew Cabin Thermal Ranges 145
Table 5.7.3 Transport Properties for Common Thermal Control Loop Working Fluids....146
Table 5.7.4 Thermodynamic Properties of Common Thermal Control Phase-Change Materials for Liquid-Vapor Transitions 147
Table 5.7.5 Thermodynamic Properties of Common Thermal Control Phase-Change Materials for Solid-Liquid Transitions....147

Table 7.3.1 International Space Station Atmosphere Control and Supply 164
Table 7.3.2 International Space Station Atmosphere Revitalization Subsystem....166
Table 7.3.3 International Space Station Temperature and Humidity Control 167
Table 7.3.4 International Space Station Fire Detection and Suppression....168
Table 7.3.5 International Space Station Vacuum Services....168
Table 7.3.6 International Space Station Water Recovery and Management 169
Table 7.3.7 Spacelab Atmosphere Revitalization Subsystem 170
Table 7.3.8 Spacelab Active Thermal Control Subsystem 170
Table 7.3.9 Spacelab Temperature and Humidity Control 171
Table 7.3.10 Spacelab Water Recovery and Management 171
Table 7.3.11 Space Shuttle Atmosphere Revitalization Subsystem 172
Table 7.3.12 Space Shuttle Airlock Support Subsystem 175
Table 7.3.13 Space Shuttle Active Thermal Control Subsystem....175
Table 7.3.14 Space Shuttle Water Recovery and Management....176

FIGURES

Figure Page

Figure 2.4.1 Life support system interfaces according to the Exploration Life Support Project structure. 8

Figure 3.2.1 Power Generation and Storage Options Considered 28

Figure 5.7.1 Active thermal control system component definitions. 139
Figure 5.7.2 Active thermal control system hardware for the Shuttle Orbiter. 141
Figure 5.7.3 External active thermal control system hardware for International Space Station at Assembly Complete. 142

1 INTRODUCTION

The Exploration Life Support (ELS) Baseline Values and Assumptions Document (BVAD) provides analysts and modelers as well as other life support researchers with a common set of initial values and assumptions, or baseline. This baseline, in turn, provides a common point of origin from which all Systems Integration, Modeling, and Analysis (SIMA) Element studies will depart.

1.1 PURPOSE AND PROCESS

The BVAD identifies specific physical quantities that define life support systems from an analysis and modeling perspective. For each physical quantity so identified, the BVAD provides a nominal or baseline value plus a range of possible or observed values. Finally, the BVAD documents each entry with a description of the quantity's use, value selection rationale, and appropriate references.

The baseline values listed in the BVAD are designed to provide defaults for those quantities within each study that are not of particular interest for that study and may be adequately described by default values.

> *For example, the direct solar irradiation for vehicles orbiting around Luna varies between 1,323 W/m² and 1,414 W/m² with a mean value of 1,367 W/m² (K&K, 1998). Thus, the solar constant at Luna naturally varies by 91 W/m² (6.7 %). Williams (1997) lists a mean value of 1,380 W/m² for the solar constant at Luna. While any value from 1,323 W/m² to 1,414 W/m² might be selected for the solar constant in a study sited in Luna orbit, a mean value of 1,370 W/m² might be defined as the baseline solar flux at Luna. Thus, all studies would use a consistent value of 1,370 W/m² unless they were specifically exploring the effect of varying the solar constant.*

This example is well bounded. Some life support assumptions are similarly well bounded. Others, such as the growth rate for plants, are not well bounded. For these, reasonable upper and lower values are given, although other values showing a greater range could be used.

Without an agreement, each researcher will generally select his/her baseline values using whatever sources are available and/or deemed most accurate. While values from one researcher to the next may be similar, variations in input values lead to further variations in results when one compares studies from multiple sources. As such, it is more difficult to assess the significance of variations in results between studies from different sources without conducting additional analyses to bring the multiple studies to a similar baseline.

Values for this document were taken from a variety of sources and several SIMA researchers, in addition to the authors, helped to prepare the manuscript that follows. As part of the process of assigning values to each of the life support quantities, the writers evaluated and debated each entry to produce a set of mutually agreeable values with corresponding limits. Ultimately comments from all readers are welcome and encouraged. To allow the BVAD to truly maintain its utility as a store of modeling and analysis information, the BVAD is a living document that will be updated as necessary to reflect new technology and/or scientific discoveries.

The ELS Project controls the BVAD, while SIMA maintains and updates the BVAD. Subsequent releases will be made as required. Please send comments to:

Mr. Michael K. Ewert
Lead, Systems Integration, Modeling, and Analysis Element
Exploration Life Support Project
National Aeronautics and Space Administration
Lyndon B. Johnson Space Center
2101 NASA Parkway, Mail Code EC2
Houston, Texas 77058
E-mail: michael.k.ewert@nasa.gov

1.2 ADVANTAGES

Aside from the advantages implied above, the BVAD provides several additional benefits.

- The BVAD allows the life support analysis community to carefully review and evaluate input study assumptions. Such review will lead to greater confidence in and understanding of the studies.
- Each study can now benefit from the "best" available input values and assumptions by drawing upon information collected by a group of researchers rather than just from one person's files. Further, such values reflect the combined expertise of the group as a whole rather than just those from one individual.
- The BVAD process identifies those quantities that are not well-defined by current information. Such quantities are primary candidates for parametric studies to determine their importance on modeling and analysis results. Further, this approach identifies values that may require additional experimental input to adequately quantify.
- The BVAD allows researchers from multiple sites to efficiently and quickly compare results from multiple studies. Because each study uses the same baseline, the variations between studies arise from differences in models or the parameters varied rather than a complex combined effect that includes variations in the assumed baseline.
- The BVAD will allow any researcher to conduct a follow-on study to any previous work because each study's assumptions will be clearly available and carefully recorded. Further, researchers can reference the BVAD for their baseline parameter values except those that are unique to their specific study.

1.3 SYSTEMS INTEGRATION, MODELING, AND ANALYSIS ELEMENT

SIMA is the element within the ELS Project responsible for maintaining this document. One objective of the SIMA Element is to encourage and improve communication between the various modelers within the ELS Project.

1.4 ACKNOWLEDGEMENT

Many researchers contributed information or insights to make this current draft possible. Thus, the BVAD editor would like to specifically acknowledge the following individuals for their contributions: James E. Alleman, Ph.D., Molly S. Anderson (NASA), Susan D. Baggerman (NASA), Scott Bell (TRACLabs), David Bergeron, Charles Bourland, Ph.D., Cheryl B. Brown (ESCG), Juan M. Castillo (ESCG), Robert L. Cataldo (NASA), James Cavazzoni, Ph.D., Nicholas Coppa, Ph.D. (Nanomaterials Company), Katherine R. Daues (NASA), Alan E. Drysdale, Ph.D. (The Boeing Company), Bruce E. Duffield (ESCG), Michael K. Ewert (NASA), John W. Fisher (NASA), Steve J. French (Lockheed Martin), James R. Geffre (NASA), John A. Hogan, Ph.D. (National Space Grant Foundation), Jean B. Hunter, Ph.D. (Cornell University), Frank F. Jeng (ESCG), Kevin E. Lange, Ph.D. (ESCG), Wen-Ching Lee (ESCG), Julie A. Levri (NASA), Sabrina Maxwell, Seza Orcun, Ph.D. (Purdue University), Michele Perchonok, Ph.D. (NASA), Alan T. Perka (ESCG), Jay L. Perry (NASA), Karen D. Pickering, Ph.D. (NASA), Luis F. Rodriguez, Ph.D. (University of Illinois), Michael Rouen (NASA), Kathy Ruminsky, Laura A. Shaw (NASA), David A. Vaccari, Ph.D. (Stevens Institute of Technology), Yael Vodovotz, Ph.D., Kanapathipi Wignarajah, Ph.D. (Enterprise Advisory Services Inc.), Raymond Wheeler, Ph.D. (NASA), and Kristina R. Wines (NASA).

2 APPROACH

The assumptions here arise from various sources and they have been organized into sets of similar data. These assumptions relate to the scenarios, the mission infrastructure, and the various life support subsystems. References are documented where possible to provide traceability.

2.1 DEVELOPMENT

The baseline values and assumptions are based on experience in developing static and dynamic models of life support systems. Where numerical values are given, and an attempt has been made to focus on quantitative data, an attempt has been made to include upper and lower limits as well as a recommended value. In some cases, the upper and lower limits are definite values set by the physics or biology of the situation. For other cases, they are representative values that will not often be exceeded in a real system.

2.2 CONTEXT

This document assumes no particular mission, but does focus on near- and far-term exploration missions of importance to NASA. In some cases, the data may be applicable to only certain missions. The reader is directed to ELS Project documents on reference missions, such as RMD (2001) or LRM (2006), for more details on potential mission scenarios.

2.3 BACKGROUND

2.3.1 EQUIVALENT SYSTEM MASS DESCRIPTION

Equivalent system mass (ESM) is a technique by which several physical quantities describing a system or subsystem may be reduced to a single physical parameter, mass. [1] The primary advantage is to allow comparison of two life support systems with different parameters using a single scale. This is accomplished by determining appropriate mass penalties or conversion factors to convert the non-mass physical inputs to an equivalent mass. For systems that require power, for example, the Power External Interface can yield an appropriate power-mass penalty by dividing the average power plant output by the total mass of the generating power plant. Thus, for a nuclear power plant on an independent lander that, on average, delivers 100 kW of electrical power and has an overall mass of 8,708 kg (Mason, *et al.*, 1992) [2] the power-mass penalty is 11.48 W/kg. This power-mass penalty effectively assigns a fraction of the Power External Interface mass to a power-using subsystem in place of that subsystem's power requirement. In like manner, mass penalties to account for heat rejection and volume within a pressurized shell are defined. A crewtime mass penalty is also defined below. The definition of equivalent mass for a system is the sum of the equipment and consumable commodity mass plus the power, volume, thermal control, and crewtime requirements as masses. Please see ESM GD (2003) for additional information on ESM.

2.3.2 DEFINITION OF INFRASTRUCTURE

Infrastructure is everything necessary to operate the life support equipment that is not otherwise specifically defined elsewhere as a component of the life support system. For an overall life support system analysis, the system includes the life support equipment. Necessary infrastructure, then, may include all necessary supplies and equipment for electrical power generation or a pressurized cabin in which the equipment operates. Some infrastructure, though vital to overall system success, may have a small or negligible impact on a study's primary focus. For example, data and communications infrastructure generally has little impact on the equivalent system mass of a life support system and can thus be safely neglected in this case. Table 2.4.1 and Table 2.4.2 identify the most common and significant interactions between life support subsystems and other spacecraft systems outside of the life support system. Section 3.2 discusses and lists infrastructure cost factors for overall life support system analyses,

---

[1] An ESM evaluation is very similar in form to computing a project's net present value. Thus, ESM is a method for ranking a system or subsystem concept relative to other concepts.

[2] The actual mass quoted here has been adjusted slightly to account for some differences between the work listed in the reference and the desired system.

while Section 5 provides additional information about commodity demands to and from the ELS External Interfaces.

2.3.3 DEFINITION OF MODELING

A model is an analogous system that mimics the behavior of some real system. Within ELS, mathematical models are used to predict or simulate, control, design, optimize, or facilitate an understanding of a life support system, a component, or a subsystem. Models might be quite simple, to calculate overall masses, for example, or quite complex, involving gas exchange at the molecular or plant growth levels. This document includes and supports both types of models.

2.3.4 UNITS AND VALUES

All numerical assumptions are given using the Système Internationale d'Unités (SI), which is also known as the Metric System of units. This approach is consistent with NASA Policy Directive 8010.2 D (NPD 8010.2 D, 2004). A list of Metric System units for physical quantities of interest is provided in the Appendices. Some values are also presented in comparable English units as well.

Generally, lower, nominal, and upper values are provided. Unless stated otherwise, the numbers are intended to represent average values under nominal conditions for different design cases. Short-term fluctuations are not considered, nor are emergency or contingency situations except as explicitly noted. Values not listed per capita assume a crew of six, unless otherwise stated.

2.4 LIFE SUPPORT SUBSYSTEMS WITHIN THE EXPLORATION LIFE SUPPORT PROJECT

Hanford (2000) provides a generic description of life support subsystems as well as subsystem and external interface relationships for a life support system. This approach originally mirrored the organization for the Advanced Life Support Program. This classification initially arose from a Systems Modeling and Analysis Project [3] workshop in the fall of 1999 and now, after review and revision, is presented below as the current standard definition for the ELS Project. [4] Information within the BVAD and future analysis tasks will be organized according to this structure.

As noted above, other formats to describe life support systems exist. This one specifically classifies those disciplines housed within and funded by the ELS Project as subsystems, Table 2.4.1, while those disciplines that interact with life support subsystems, but are not the sole responsibilities of the ELS Project, are external life support interfaces, Table 2.4.2. Thus, Air, Habitation, Waste, and Water are classified as subsystems, while Crew [5], Environmental Monitoring and Control (EMC), Extravehicular Activity (EVA) Support, Food, In-Situ Resource Utilization (ISRU), Power, Propulsion, Radiation Protection, and Thermal are external life support interfaces. The interfaces listed in the last column for each subsystem or external interface are generally inclusive, attempting to account for all possible interactions, even if some of those interactions are highly unlikely. Figure 2.4.1 provides a graphical depiction of the information in Table 2.4.1 and Table 2.4.2.

Please note that within this document the ELS subsystem names, such as "Air Subsystem" and "Water Subsystem," are proper names. However, the generic terms "system" and "subsystem" are often used interchangeably in the text within this document to refer to similar suites of equipment. This laxness with respect to nomenclature reflects the constantly changing perspective that both ELS researchers and analysts use while considering many different technologies or groups of technologies. In reality, most life support equipment is constructed from several lower-level components and also fits within a higher-level assembly. Thus the terms "system" and "subsystem" vary according to the current problem definition and often differ for other problems or studies.

---

[3] Systems Modeling and Analysis Project is the previous name for the Systems Integration, Modeling, and Analysis element.

[4] Previous work under the Advanced Life Support (ALS) Program, such as the Bioregenerative Planetary Life Support Systems Test Complex (BIO-Plex), predates the ELS Project organizational structure, so deviations from Table 2.4.1 and Table 2.4.2 exist when consulting historical documentation from the ALS Program.

[5] Though the presence of the crew alone justifies the inclusion of the life support subsystems, the crewmembers are external to the life support equipment and thus are listed as an external interface here.

Table 2.4.1 Exploration Life Support Subsystem Descriptions and Interfaces

Subsystem	Description	Life Support System Interfaces
Air	The Air Subsystem maintains the vehicle cabin atmospheric pressure and quality. Functional areas include atmospheric gas storage, supply, and distribution; carbon dioxide partial pressure control; humidity control (unless controlled by a Thermal External Interface condensing heat exchanger); trace chemical contaminant control; particulate matter control; resource recovery, storage, and processing; and supporting infrastructure. Process technology developmental work is conducted under the ELS Air Revitalization Element.	Habitation, Waste, Water, EMC, Crew, EVA Support, ISRU, Power, Thermal, Propulsion
Habitation	The Habitation Subsystem is responsible for crew accommodations, packaging and preparation for crew supplies, clothing management systems, wardroom, sleep stations, hygiene stations, galley and food preparation, commode, housekeeping, human engineering, volume management, and vehicle layout. This technology area is responsible for implementing hardware resulting from human factors requirements. Development work is conducted under the ELS Habitation Engineering Element.	Air, Waste, Water, EMC, Crew, EVA Support, Food, Power, Radiation Protection, Thermal
Waste	The Waste Subsystem collects and conditions waste material from anywhere in the vehicle or habitat, including packaging, human wastes, inedible biomass, and brines from other subsystems such as the Water Subsystem. The Waste Subsystem may sterilize and store the waste, or reclaim life support commodities, depending on the life support system closure and/or mission duration. Waste subsystem work is conducted under the ELS Waste Management Systems Element.	Air, Habitation, Water, EMC, Crew, EVA Support, Food, Power, Radiation Protection, Thermal, Propulsion
Water	The Water Subsystem collects wastewater from all possible sources, recovers and transports potable water, and stores and provides that water at the appropriate purity for crew consumption and hygiene as well as external users. Water subsystem work is conducted under the ELS Water Recovery Systems Element.	Air, Habitation, Waste, EMC, Crew, EVA Support, Food, ISRU, Power, Radiation Protection, Thermal, Propulsion

Table 2.4.2 Exploration Life Support External Interfaces Descriptions and Interfaces

External Life Support Interfaces	Description	Life Support System Interfaces
Crew	The Crew Interface interacts with all life support subsystems and external interfaces. It accounts for all metabolic inputs and outputs from crew members. Historically, and likely in the near-term, crewmembers are the foremost consumers of life support commodities and the primary producers of waste products.	All
Environmental Monitoring and Control	The Environmental Monitoring and Control (EMC) Interface provides information on the chemical and biological status of the crew habitat. This includes trace and major constituent composition of air and water, and microbial content of air, water, and surfaces. The information is used to control proper functioning of the life support system, as well as indicate off-nominal events such as leaks.	All
Extravehicular Activity Support	The Extravehicular Activity (EVA) Support Interface provides life support consumables for all suited activities, including oxygen, water, and food, as well as carbon dioxide and waste removal. Suits may be employed for launch, entry and abort (in case of cabin depressurization); contingency EVA in a weightless environment; emergency return from a human mission beyond low-Earth orbit; and surface EVA operations on the Moon and Mars.	Air, Habitation, Waste, Water, EMC, Crew, Food, Power, Thermal
Food	The Food Interface provides the crew with prepackaged food products or commodities requiring some level of preparation or processing, and includes the stowage systems necessary for these items. If an advanced life support System includes a Biomass Subsystem, the Food System also receives harvested agricultural products and processes them into edible form.	Air, Habitation, Waste, Water, EMC, Crew, EVA Support, Power
In-Situ Resource Utilization	The In-Situ Resource Utilization Interface provides life support commodities such as gases, water and regolith from local planetary materials, for use throughout the life support system.	Air. Water, EMC, Crew, Power, Radiation Protection
Power	The Power Interface provides the necessary energy to support all equipment and functions within the life support system.	All
Propulsion	The Propulsion Interface provides resources such as oxygen to the life support system.	Air, Water, EMC, Waste, EVA Support
Radiation Protection	The Radiation Protection Interface provides protection from environmental radiation. It is possible that the life support system could provide commodities to or receive commodities from the radiation protection interface (e.g., water or waste products).	Habitation, Waste, Water, Crew, Food, ISRU, Power
Thermal	The Thermal Interface is responsible for maintaining cabin temperature and humidity (unless controlled jointly with other atmosphere revitalization processes) within appropriate bounds and for rejecting the collected waste heat from crew and equipment to the external environment. Note: Equipment to remove thermal loads from the cabin atmosphere normally provides sufficient air circulation. Thermal Interface work is conducted under the Thermal Control System Development for Exploration Project.	Air, Habitation, Waste, Water, EMC, Crew, EVA Support, Food, Power

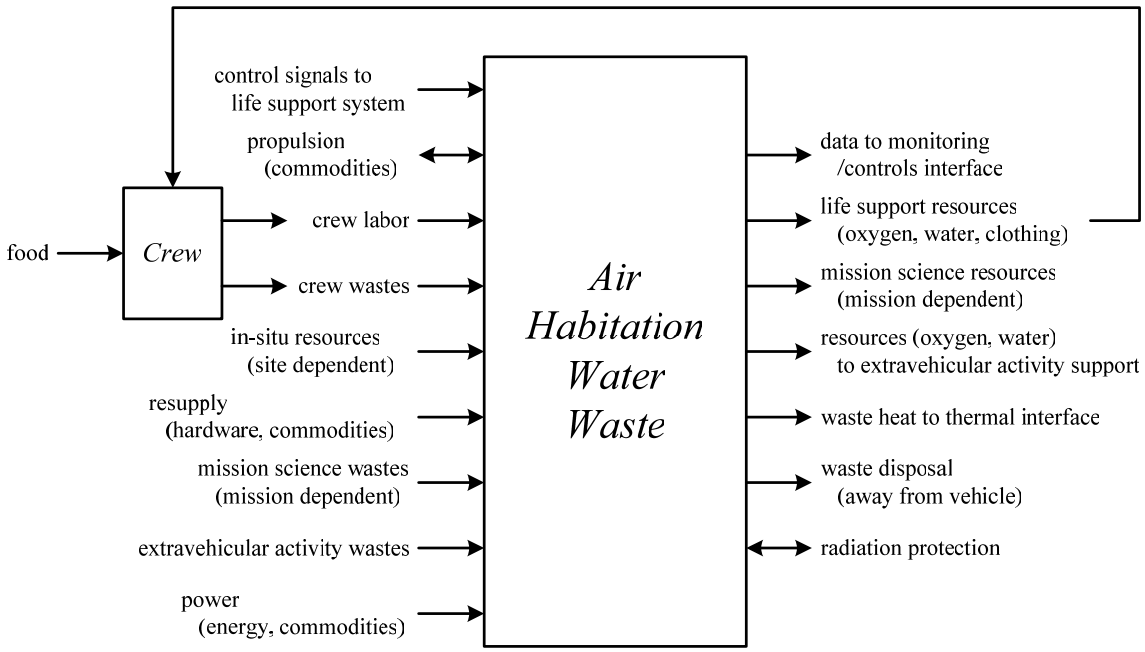

Figure 2.4.1 Life support system interfaces according to the Exploration Life Support Project structure.

2.5 MISSION DURATION

Duration of space exploration missions with a crew may vary from a few hours up to decades when one considers historical experience, and planned and possible mission concepts to explore Luna, Mars, and beyond. To provide guidance on common mission duration characteristics, Table 2.5.1 through Table 2.5.5 provide a series of classifications for mission durations with a corresponding listing, in qualitative terms, of likely approaches for life support functions. Two or more approaches for life support functions may exist because the design ultimately is influenced by numerous architectural decisions and mission constraints. Table 2.5.1 provides an overall summary, while Table 2.5.2 through Table 2.5.5 provide details of life support functions as well as qualitative examples for providing each function. For an actual flight program, each life support function as well as the subsystems comprising the vehicle environmental control and life support subsystem will have detailed functional specifications assigned.

Tables such as Table 2.5.1 through Table 2.5.5 may be used in many ways. Of primary importance here are two uses.

The first use involves the mission designators listed in Table 2.5.1. The subsystem and external interface descriptions associated with each designator bounds, in a qualitative manner, some approaches to process technologies and architecture that NASA might consider to accomplish a mission of the specific duration. While deviations may exist, the descriptors for each designator provide either common shorthand or at least a common starting point to discuss a mission. For example, a researcher may examine a “short” mission using the first option when more than one option is available. Another researcher may consider the impacts of a “fresh vegetable production unit” on a “short” mission even though that is not part of an expected approach for a “short” mission. In this latter case, the shorthand approach might designate the case as a “short” mission using the first option, when more than one is possible, except that the food external interface includes “stored food with a fresh vegetable production unit.”

The second use involves using Table 2.5.1 through Table 2.5.5 to categorize a life support system architecture regardless of mission duration. For example, Project Mercury used "stored commodities (oxygen in tanks) with consumable waste removal hardware (lithium hydroxide cartridges)" for the air subsystem, "launch-entry suit" for the habitation subsystem, "waste storage only" for the waste subsystem, "stored (water)" for the water subsystem, "stored food only" for the food external interface, "rejection with consumables" for the thermal external interface, etc., based on Table 2.5.1. Using Table 2.5.2, the categorization for Project Mercury might continue by specifying "consumables" for carbon dioxide removal, "stored commodities" for oxygen supply, "none" for carbon dioxide reduction, etc. It should be noted that for another mission concept, individual options might be "physicochemical hardware and regenerable consumables" for carbon dioxide removal, "stored commodities" for oxygen supply, "none" for carbon dioxide reduction.

The color scheme throughout these tables is ***not*** meant to imply corresponding options. Or, choosing the first option for carbon dioxide removal does ***not*** require choosing only the first option for the other functions within the air subsystem. [6] Rather, the color scheme provides a means of visual feedback, in addition to the associated text, to allow readers to quickly identify differences between two or more life support system architectures when all approaches for those architectures are compared.

The color scheme is designed such that lighter colors correspond to lower-numbered options, which, in turn, correspond to the "least closed" life support system option for each function. Alternately, the highest-numbered option for each function has the darkest color, although functions with fewer options will have a lighter color for their "darkest color" than functions with more options. In general, the highest-numbered option also corresponds to the greatest closure, and, therefore, the greatest independence from Earth-based logistics support for that function.

[6] The implication here is that a user might select a series of options for individual air subsystem functions that are not described by any of the overall air subsystem descriptors. If this happens, it is recommended that users develop appropriate "shorthand" for such programs and/or use a series of individual function descriptors in place of the overall descriptors. The overall descriptors should, however, work well with projected vehicles as described in the Exploration Systems Architecture Study (ESAS) report (ESAS, 2005).

Table 2.5.1 Overall Description of Mission Duration and Life Support System Functionality

Designator	Duration	Air Subsystem	Habitation Subsystem	Waste Subsystem	Water Subsystem	Food External Interface	Thermal External Interface
Very Short	~30 hours	Stored Commodities w/ Consumable Waste Removal Hardware	Launch-Entry Suit w/ Wipes Only	Waste Storage Only; Minimal Restrictions on Inputs	Stored / Consumables	Stored Food Only	Rejection w/ Consumables
Short	~20 days	Stored Commodities w/ Consumable Waste Removal Hardware	Launch-Entry Suit +/- Other Clothing w/ Wipes & Bags for Toilet	Waste Storage Only; Minimal Restrictions on Inputs	Stored / Consumables	Stored Food Only	Non-Consumable Rejection Supplemented by Consumables
		Regenerable Physicochemical Hardware w/ Consumables & Make Up, If Necessary	Pre-Packaged Clothing; Limited Water for Oral Hygiene; Wipes for Body Hygiene; Dedicated Toilet	Waste Stabilization w/o Water Recovery; Minimal Restrictions on Inputs; Source Separation			
Medium	~20 weeks	Regenerable Physicochemical Hardware w/ Consumables & Make Up, If Necessary	Pre-Packaged Clothing; Limited Water for Oral Hygiene; Wipes for Body Hygiene; Dedicated Toilet	Waste Stabilization w/o Water Recovery; Minimal Restrictions on Inputs; Source Separation	Stored / Consumables	Stored Food Only	Non-Consumable Rejection Supplemented by Consumables
					Recovery / Reuse of Some Waste Water w/ Other Waste Water Stored; Make Up from Stores; Consumables Supplied		Non-Consumable Rejection
Long	~10-20 months	Physicochemical Hardware & Regenerable Consumables w/ Negligible Bioregeneration & In-Situ Oxygen, If Necessary & Available	Pre-Packaged Clothing; Limited Water for Oral & Body Hygiene; Dedicated Toilet	Waste Stabilization w/ Water Recovery; Wet Wastes Accepted w/ Others Stored	Recovery / Reuse of Some or All Waste Water w/ Any Other Waste Water Stored w/o Brine Recovery, If Produced; Consumables Supplied	Stored Food w/ Fresh Vegetable Production Unit	Non-Consumable Rejection Supplemented by Consumables
		Physicochemical Hardware & Regenerable Consumables w/ Minor Bioregeneration & In-Situ Oxygen, If Necessary & Available	Clothing Laundry; Unlimited Water for Oral & Body Hygiene; Dedicated Toilet		Recovery / Reuse of All Waste Water w/ Brine Recovery, If Produced; Consumables Supplied; ISRU Make Up Possible	15 % Bioregeneration w/ Stored Food	Non-Consumable Rejection

Table 2.5.1 Overall Description of Mission Duration and Life Support System Functionality (concluded)

Designator	Duration	Air Subsystem	Habitation Subsystem	Waste Subsystem	Water Subsystem	Food External Interface	Thermal External Interface
Very Long	~10 years	Physicochemical Hardware & Regenerable Consumables w/ Minor Bioregeneration & In-Situ Oxygen, If Necessary & Available	Clothing Laundry; Unlimited Water for Oral & Body Hygiene; Dedicated Toilet	Waste Stabilization w/ Water Recovery; Wet Wastes Accepted w/ Others Stored	Recovery / Reuse of All Waste Water w/ Brine Recovery, If Produced; Consumables Supplied; ISRU Make Up Possible	Stored Food w/ Fresh Vegetable Production Unit	Non-Consumable Rejection
		Significant Bioregeneration w/ Physicochemical Hardware & In-Situ or Regenerable Consumables; Wastes Vented or Stored		Reclamation of Life Support Commodities w/ Consumables, Mineralization, & Storage	Recovery / Reuse of All Waste Water w/ Brine Recovery, If Produced; ISRU Make Up & Consumable Manufacture	15 % Bioregeneration w/ Stored Food	
Multi-Generational	~2-10 decades	Integrated Bioregeneration w/ In-Situ Commodities for Minimal Losses & Some Hardware Manufacturing	Clothing Laundry; Unlimited Water for Oral & Body Hygiene; Dedicated Toilet	Reclamation of Life Support Commodities w/ Consumables, Mineralization, & Storage	Recovery / Reuse of All Waste Water w/ Brine Recovery, If Produced; ISRU Make Up & Consumable Manufacture	50 % Bioregeneration w/ Stored Food	Non-Consumable Rejection
				Reclamation of Life Support Commodities w/ Mineralization, & Storage w/o Consumables		75 % Bioregeneration w/ Stored Food	
		Integrated Bioregeneration w/ In-Situ Commodities for Minimal Losses & All Hardware Manufacturing	Clothing Laundry; Unlimited Water for Oral & Body Hygiene; Dedicated Toilet; Clothing Manufactured Locally		Recovery / Reuse of All Waste Water w/ Brine Recovery, If Produced; ISRU Make Up & All Hardware Manufacture	Essentially Complete Bioregeneration w/ Protein from Plant Products	
				Reclamation of All Commodities w/ Mineralization w/o Consumables w/o Permanent Storage (No Waste)		Complete Bioregeneration w/ Protein from Animal Products	
"Permanent"	~1 × 10^9 years	Integrated Bioregeneration w/ In-Situ Commodities for Minimal Losses & All Hardware Manufacturing	Clothing Laundry; Unlimited Water for Oral & Body Hygiene; Dedicated Toilet; Clothing Manufactured Locally	Reclamation of All Commodities w/ Mineralization w/o Consumables w/o Permanent Storage (No Waste)	Recovery / Reuse of All Waste Water w/ Brine Recovery, If Produced; ISRU Make Up & All Hardware Manufacture	Complete Bioregeneration w/ Protein from Animal Products	Non-Consumable Rejection

Table 2.5.2 Functionality and Possible Options for the Air Subsystem

	Air Subsystem	Air Subsystem: Carbon Dioxide Removal	Air Subsystem: Oxygen Supply	Air Subsystem: Carbon Dioxide Reduction	Air Subsystem: Trace Contaminant Control	Air Subsystem: Pressure Control	Air Subsystem: In-Situ Resource Utilization	Air Subsystem: Sparing
Opt 1	Stored Commodities w/ Consumable Waste Removal Hardware	Consumables	Stored Commodities / Consumables	None	None	Stored	None	None
Opt 2	Regenerable Physicochemical Hardware w/ Consumables & Make Up, If Necessary	Physicochemical Hardware & Regenerable Consumables	Physicochemical Hardware & Regenerable Consumables	Physicochemical Hardware & Regenerable Consumables; Waste Gases Vented	Consumables & Venting Wastes, If Necessary	Consumable Chemical Generation or Stored Gases	Provide Oxygen	Logistics Supply
Opt 3	Physicochemical Hardware & Regenerable Consumables w/ Negligible Bioregeneration & In-Situ Oxygen, If Necessary & Available	Physicochemical Hardware & Regenerable Consumables w/ Minor Bioregeneration	Physicochemical Hardware & Regenerable Consumables w/ Minor Bioregeneration	Physicochemical Hardware & Regenerable Consumables; Wastes Vented or Stored	Regenerable Hardware, Venting Wastes, If Necessary, w/o Consumables	Completely Regenerable Generation	Provide Diluent Gas	Logistics Supply w/ Limited Remanufacturing
Opt 4	Physicochemical Hardware & Regenerable Consumables w/ Minor Bioregeneration & In-Situ Oxygen, If Necessary & Available	Significant Bioregeneration w/ Physicochemical Hardware & Regenerable Consumables	Significant Bioregeneration w/ Physicochemical Hardware & Regenerable Consumables	Physicochemical Hardware & Regenerable Consumables; Wastes Vented or Stored; Minor Bioregeneration	Regenerable Hardware w/o Losses or Consumables	Use Local Materials	Provide Oxygen & Diluent Gas	Local Manufacturing; In-Situ Resource Feedstock

Table 2.5.2 Functionality and Possible Options for the Air Subsystem (concluded)

	Air Subsystem	Air Subsystem: Carbon Dioxide Removal	Air Subsystem: Oxygen Supply	Air Subsystem: Carbon Dioxide Reduction	Air Subsystem: Trace Contaminant Control	Air Subsystem: Pressure Control	Air Subsystem: In-Situ Resource Utilization	Air Subsystem: Sparing
Opt 5	Significant Bioregeneration w/ Physicochemical Hardware & In-Situ or Regenerable Consumables; Wastes Vented or Stored	Integrated Regeneration; Bioregenerative w/ > 50 % Food Closure; Consumables Produced In-Situ	Integrated Regeneration; Bioregenerative w/ > 50 % Food Closure; Consumables Produced In-Situ	Significant Bioregeneration w/ Physicochemical Hardware & Regenerable Consumables; Wastes Vented or Stored	Regenerable Hardware w/o Losses; Local Spares Manufacturing		Provide Oxygen, Diluent Gas, & Other Consumables	Local Manufacturing of All Equipment; In-Situ Resource Feedstock
Opt 6	Integrated Bioregeneration w/ In-Situ Commodities for Minimal Losses & Some Hardware Manufacturing	Integrated Regeneration; Bioregenerative w/ > 75 % Food Closure; Any Spares & Consumables Produced In-Situ	Integrated Regeneration; Bioregenerative w/ > 75 % Food Closure; Any Spares & Consumables Produced In-Situ	Integrated Regeneration; Bioregenerative w/ > 50 % Food Closure; Consumables Produced In-Situ			Provide All Required Consumables	None; No Spares Needed (Fully Reliable w/o Spares)
Opt 7	Integrated Bioregeneration w/ In-Situ Commodities for Minimal Losses & All Hardware Manufacturing			Integrated Regeneration; Bioregenerative w/ > 75 % Food Closure; Any Spares & Consumables Produced In-Situ			Provide All Required Consumables & Spares	

Table 2.5.3 Functionality and Possible Options for the Habitation Subsystem

	Habitation Subsystem	Habitation Subsystem: Waste Closet Format	Habitation Subsystem: Oral & Body Hygiene	Habitation Subsystem: Clothing	Habitation Subsystem: Sparing
Opt 1	Launch-Entry Suit w/ Wipes Only	None	None or Wipes	Launch-Entry Suit Only	None
Opt 2	Launch-Entry Suit +/- Other Clothing w/ Wipes & Bags for Toilet	Bags / No Dedicated Hardware	Wipes w/ Limited Water for Oral Hygiene; Toothpaste Restrictions	Launch-Entry Suit w/ Pre-Packaged Clothing	Logistics Supply
Opt 3	Pre-Packaged Clothing; Limited Water for Oral Hygiene; Wipes for Body Hygiene; Dedicated Toilet	Dedicated Toilet w/ Consumables	Limited Water for Oral & Body Hygiene; Cleanser Restrictions	Aqueous Laundry w/ Consumable Cleaning Agent; Launch-Entry Suit w/ Pre-Packaged Clothing	Logistics Supply w/ Limited Remanufacturing
Opt 4	Pre-Packaged Clothing; Limited Water for Oral & Body Hygiene; Dedicated Toilet	Dedicated Toilet w/o Consumables or Regenerable Consumables	Unlimited Water for Oral & Body Hygiene; Cleanser Restrictions	Aqueous Laundry w/ Regenerable Cleaning Agent; Launch-Entry Suit w/ Pre-Packaged Clothing	Local Manufacturing; In-Situ Resource Feedstock
Opt 5	Clothing Laundry; Unlimited Water for Oral & Body Hygiene; Dedicated Toilet	Toilet & Associated Supplies Manufactured Locally	Unlimited Water for Oral & Body Hygiene; No Cleanser Restrictions	Aqueous Laundry w/ Regenerable Cleaning Agent; Launch-Entry Suit; Clothing Manufactured Locally	Local Manufacturing of All Equipment; In-Situ Resource Feedstock
Opt 6	Clothing Laundry; Unlimited Water for Oral & Body Hygiene; Dedicated Toilet; Clothing Manufactured Locally				None; No Spares Needed (Fully Reliable w/o Spares)

Table 2.5.4 Functionality and Possible Options for the Waste Subsystem

	Waste Subsystem	Waste Subsystem: Input Trash Model	Waste Subsystem: Volume Reduction	Waste Subsystem: Stabilization / Making Safe	Waste Subsystem: Containment	Waste Subsystem: Resource Recovery	Waste Subsystem: Sparing
Opt 1	Waste Storage Only; Minimal Restrictions on Inputs	Trash, including Expended Clothing & Crew Metabolic Wastes w/o Source Separation	None / Manual / "Footballs"	None	Storage in Vehicle	None	None
Opt 2	Waste Stabilization w/o Water Recovery; Minimal Restrictions on Inputs; Source Separation	Trash, including Expended Clothing & Crew Metabolic Wastes w/ Source Separation	Physical Compaction	Chemical Stabilization (Consumables)	Storage w/ Odor Control; Limited Duration in Vehicle	Water Only	Logistics Supply
Opt 3	Waste Stabilization w/ Water Recovery; Wet Wastes Accepted w/ Others Stored	Trash, Clothing, Crew Metabolic Wastes & Inedible Biomass w/ Source Separation	Melt Compaction	Moisture Removal (Dewatering / Freeze-Drying) w/o Encapsulation	Storage w/ Odor Control; Unlimited Duration in Vehicle	Water & Minerals; < 50 % Food Closure w/ Biomass Production	Logistics Supply w/ Limited Remanufacturing
Opt 4	Reclamation of Life Support Commodities w/ Consumables, Mineralization, & Storage	Trash, Clothing, Crew Metabolic Wastes & Inedible Biomass w/o Source Separation	Partial Mineralization w/ Melt Compaction	Moisture Removal (Dewatering / Freeze-Drying) w/ Encapsulation	Storage w/ Odor Control & Stabilization; Unlimited Duration Outside Vehicle	Water, Minerals, & Some Carbon Dioxide; ≥ 50 % Food Closure w/ Biomass Production	Local Manufacturing; In-Situ Resource Feedstock
Opt 5	Reclamation of Life Support Commodities w/ Mineralization, & Storage w/o Consumables	Trash, Clothing, Crew Metabolic Wastes & Inedible Biomass w/o Source Separation; Expended Hardware w/ Source Separation	Complete Mineralization or Other Complete Volume Reduction	Partial or Complete Mineralization	None; Essentially Complete Reutilization	Water, Minerals, & Full Carbon Dioxide	Local Manufacturing of All Equipment; In-Situ Resource Feedstock
Opt 6	Reclamation of All Commodities w/ Mineralization w/o Consumables w/o Permanent Storage (No Waste)					Water, Minerals, Carbon Dioxide, Paper, Plastics, Organic Feedstocks for Food & Other Materials	None; No Spares Needed (Fully Reliable w/o Spares)

Table 2.5.5 Functionality and Possible Options for the Water Subsystem

	Water Subsystem	Water Subsystem: Removal of Organic Compounds	Water Subsystem: Removal of Inorganic Compounds	Water Subsystem: Removal of Particulates	Water Subsystem: Removal of Microbial Organisms	Water Subsystem: Polishing
Opt 1	Stored / Consumables	None / n/a	None / n/a	None / n/a	None / Removable / Consumable Biocide at Launch	None / n/a
Opt 2	Recovery / Reuse of Some Waste Water w/ Other Waste Water Stored; Make Up from Stores; Consumables Supplied	Regenerative Technology w/ Consumables w/o Brine Recovery; If Produced	Regenerative Technology w/ Consumables w/o Brine Recovery; If Produced	Filtration; Consumable Technology	Locally-Produced / Regenerable, Low-Toxicity Biocide	Polishing w/ Consumables
Opt 3	Recovery / Reuse of Some or All Waste Water w/ Any Other Waste Water Stored w/o Brine Recovery, If Produced; Consumables Supplied	Regenerative Technology w/ Consumables & Brine Recovery; If Produced	Regenerative Technology w/ Consumables & Brine Recovery; If Produced	Regenerable Filtration or Other Regenerable Technology	Filtration; Consumable Technology	Polishing w/ Regenerable Technology
Opt 4	Recovery / Reuse of All Waste Water w/ Brine Recovery, If Produced; Consumables Supplied; ISRU Make Up Possible	Regenerative Technology w/ Brine Recovery; If Produced; w/o Consumables or Consumables Produced In-Situ	Regenerative Technology w/ Brine Recovery; If Produced; w/o Consumables or Consumables Produced In-Situ		Regenerable Filtration or Other Regenerable Technology	
Opt 5	Recovery / Reuse of All Waste Water w/ Brine Recovery, If Produced; ISRU Make Up & Consumable Manufacture					
Opt 6	Recovery / Reuse of All Waste Water w/ Brine Recovery, If Produced; ISRU Make Up & All Hardware Manufacture					

Table 2.5.5 Functionality and Possible Options for the Water Subsystem (concluded)

	Water Subsystem: Water Supply	Water Subsystem: Wastewater	Water Subsystem: Condensate	Water Subsystem: In-Situ Resource Utilization	Water Subsystem: Sparing
Opt 1	Stored	Stored or Vented / No Recovery	Stored or Vented / No Recovery	None	None
Opt 2	Water from Other Vehicle Processes or In-Situ Sources	Used w/ Minimal Purification	Used w/ Minimal Purification	Provide Water OR Provide Other Consumable Agents	Logistics Supply
Opt 3		Purified to Potable Standards	Purified to Potable Standards	Provide Water & Other Agents (H_2SO_4, etc.)	Logistics Supply w/ Limited Remanufacturing
Opt 4					Local Manufacturing; In-Situ Resource Feedstock
Opt 5					Local Manufacturing of All Equipment; In-Situ Resource Feedstock
Opt 6					None; No Spares Needed (Fully Reliable w/o Spares)

2.6 APPLICABLE DOCUMENTS

The BVAD is intended to provide values for analysis and modeling tasks. Analysis and modeling is charged with examining both off-nominal and diverse technology options. As a result, many studies may consider situations that differ from the accepted bounds listed in the various documents containing requirements. However, when applicable, the BVAD is intended to capture the individual extremes for inputs that are appropriate for human spaceflight. Further, while the nominal values throughout this document should be consistent with one another, off-nominal values may not be consistent with other values within this document. Thus, the user should independently verify the validity of using off-nominal values.

As noted, the BVAD attempts to provide inputs for all quantities of importance for studies associated with life support systems. However, as research within the ELS Project constantly changes, many studies will require inputs for quantities not listed here. In such situations, analysts should use whatever values are appropriate and available and so note and reference those values in their reports or documentation. Further, analysts are asked to report such omissions to SIMA and provide whatever information could be used to determine values for such omitted quantities.

The following documents are other important references for life support. The latest revision is noted below and will be available electronically at *http://advlifesupport.jsc.nasa.gov*. Subsequent releases will be considered in updating this document.

ALS RD (2003) "Advanced Life Support Requirements Document," JSC-38571 (CTSD-ADV-245), Revision C, Duffield, B. E., Editor, National Aeronautics and Space Administration, Lyndon B. Johnson Space Center, Houston, Texas, February, 2003.

RMD (2001) "Advanced Life Support Systems Integration, Modeling, and Analysis Reference Missions Document," JSC-39502, Revision A, Stafford, K. W., Jerng, L. T., Drysdale, A. E., Maxwell, S., and Levri, J. A., Authors, Ewert, M. K., and Hanford, A. J., Editors, National Aeronautics and Space Administration, Lyndon B. Johnson Space Center, Houston, Texas, November, 2001.

LRM (2006) "A Lunar Reference Mission for Advanced Life Support," ESCG-4470-06-TEAN-DOC-0041, Hanford, A. J., Author, Engineering and Science Contract Group, Jacobs Sverdrup, Houston, Texas.

Parameters that are non-negotiable, for whatever reason, are considered ELS requirements and are documented within the ALS RD (2003). Some of the assumptions documented here may in time become requirements while others will be uncertain until the National Aeronautics and Space Administration (NASA) embarks on a specific mission. Some possible future missions are documented in the RMD (2001) and LRM (2006), which are companion documents to the BVAD.

3 OVERALL ASSUMPTIONS

3.1 MISSIONS

The mission affects analyses and models by changing the weighting of the various pieces of the system in terms of time dependent items, equipment design, and infrastructure cost. It can also require different contingency planning for a mission with a short-term abort option (e.g., low-Earth orbit or lunar missions) versus one without such an option (e.g., Mars missions).

3.1.1 TYPICAL VALUES FOR EXPLORATION MISSIONS

Primarily, the missions supported here are outlined in A Lunar Reference Mission for Advanced Life Support (LRM, 2006) and the Advanced Life Support Systems Integration, Modeling, and Analysis Reference Missions Document (RMD, 2001) and focus on near-Earth sites including low-Earth orbit, Luna, near-Earth asteroids, and also Mars. Assumptions are given in Table 3.1.1 for mission parameters associated with missions described within LRM (2006) and RMD (2001).

Generically, recent NASA exploration mission architectures stipulate separate vehicles for each of three distinct mission phases. The crew travels to and from the vicinity of an extraterrestrial destination in a dedicated transit vehicle. The crew transfers to a waiting crew lander to travel from orbit to a surface site, landing near a larger pre-positioned surface habitat. The crew spends the majority of its surface phase operating from the surface habitat. At the end of the surface phase, the crew transfers back to the waiting transit vehicle using the crew lander. Table 3.1.1 assumes this generic architecture. [7]

The given volume assumptions in Table 3.1.1 describe unobstructed or free volume per crewmember [8] are specified in terms of tolerable, performance, and optimal for the listed mission segment. For purposes here, performance should be viewed as nominal. The underlying lunar mission is taken from LRM (2006) which is based on the long-duration Lunar Outpost mission outlined in ESAS (2005). For either the lunar or martian missions, the duration values represent the complete time the crew occupies the indicated vehicle. Thus, for a transit vehicle, this is the sum for both the outbound and return trips. As a final note, each mission architecture may send more than one crew in sequence to use a specific surface habitat. The values in Table 3.1.1 represent durations for just a single crew's visit to a surface habitat.

---

[7] Though not presented in LRM (2006), RMD (2001), or mentioned here explicitly, missions to asteroids or comets are possible, and such ventures would probably not need a surface habitat, for example. Rather, the exploration missions here assume a site on a relatively large celestial body with appreciable inherent gravity.

[8] These values are also called net habitable volume, which is the remaining pressurized cabin volume after accounting for losses due to equipment, stowage, trash, and other items that decrease volume (Ramsey, 2002).

Table 3.1.1 Mission Assumptions

Parameter	Units	Assumptions lower	nominal	upper
Crew Size	CM	4 (1)	4 (1)	6 (1, 2)
Destination: Luna				
Volume: [9]		*Tolerable*	*Performance*	*Optimal*
Transit Vehicle [10]	m³/CM	1.13 (3)	3.54 (3)	4.25 (3)
Crew Lander [11]	m³/CM	1.27 (3)	3.54 (3)	4.39 (3)
Surface Habitat [12]	m³/CM	5.10 (3)	9.91 (3)	18.41 (3)
Duration: [13]		*Minimum*	*Nominal*	*Maximum*
Transit Vehicle [10]	d	12 (4)	14 (4)	18 (4)
Crew Lander [11]	d	5 (4)	8 (4)	8 (4)
Surface Habitat [12]	d	8 (4)	180 (4)	210 (4)
Destination: Mars				
Volume: [9]		*Tolerable*	*Performance*	*Optimal*
Transit Vehicle [14]	m³/CM	5.10 (3)	9.91 (3)	18.41 (3)
Crew Lander [15], 7 days	m³/CM	1.13 (3)	3.54 (3)	4.25 (3)
Crew Lander [15], 30 days	m³/CM	2.27 (3)	4.25 (3)	10.62 (3)
Surface Habitat [16]	m³/CM	5.10 (3)	9.91 (3)	18.41 (3)
Duration: [13]		*Minimum*	*Nominal*	*Maximum*
Transit Vehicle [14]	d	220 (2)	360 (2)	360 (2)
Crew Lander [15]	d	7 (2)	7 (2)	30 (2)
Surface Habitat [16]	d	540 (2)	600 (2)	619 (2)

References

(1) ESAS (2005)
(2) Hoffman & Kaplan (1997)
(3) Ramsey (2002)
(4) ESAS (2005) [LRM (2006)]

3.1.2 LONG-TERM EXTRATERRESTRIAL BASES

While a long-term goal of ELS is a long-duration facility in an extraterrestrial site, NASA currently has few specifications for such a mission. Rather, it is envisioned that a long-duration integrated test bed may provide a terrestrial analog for an eventual extraterrestrial base. Such ground-based testing infrastructure will provide integrated testing capabilities for technologies that will likely be used for evaluating concepts for early surface outposts on Luna or Mars. Each facility module is estimated to be 185 m³ in volume. An interconnecting tunnel and an airlock add 263 m³ and 48 m³, respectively. Thus, the total volume is estimated to be 1,237 m³, or 309 m³ per crewmember assuming a nominal crew of four people. [17] Internal air pressure for the test facility is assumed to be ambient, or about 100 kPa. [18]

---

9 The volume here specifically is unobstructed or free volume within the crew cabin.
10 In ESAS (2005) and/or LRM (2006), this vehicle is the "Crew Exploration Vehicle."
11 In ESAS (2005) and/or LRM (2006), this vehicle is the "Lunar Surface Access Module."
12 In ESAS (2005) and/or LRM (2006), this vehicle is the "Lunar Outpost."
13 This mission would have an immediate abort-to-orbit option, although not necessarily an immediate return option. Values represent total time the vehicle is occupied by the crew throughout the mission.
14 In Hoffman and Kaplan (1997) and/or RMD (2001), this vehicle is the "Mars Transit Vehicle."
15 In Hoffman and Kaplan (1997) and/or RMD (2001), this vehicle is the "Mars Descent / Ascent Lander."
16 In Hoffman and Kaplan (1997) and/or RMD (2001), this vehicle is the "Surface Habitat Lander."
17 *Editor's Note:* At this time, the scope and purpose of the integrated test stand to support hardware development is under review and development, including testing, of technologies to support long-duration missions, has been deferred. Because of prior programs, such as the Bioregenerative Planetary Life Support Systems Test Complex (BIO-Plex), very precise values are available for some earlier facilities. Thus, the configuration and

This test facility is envisioned to accommodate four people, but during overlaps for crew rotation, up to eight people may be supported for up to 72 hours (Tri, 2000). While the planned duration for tests is under review, past testing concepts have considered 120- through greater-than 400-day missions. Plant scientists favor tests of 240 days in duration because this allows two complete cropping cycles based on the harvest date for the crops with the longest life cycle.

A facility similar to this envisioned test facility could be built on Luna or Mars, with a similar configuration and constraints. Some likely differences for an actual extraterrestrial base would be mission duration, with a probable minimum duration of 540 days for any mission to Mars (as in Table 3.1.1), and a design operational lifetime of up to fifteen years.

3.2 INFRASTRUCTURE COSTS AND EQUIVALENCIES

Infrastructure costs (mass, volume, power, thermal control, and crewtime, for example), are key factors in overall system analysis. They effectively apportion a fraction of the infrastructure mass to the each component of the life support system. It is far easier to decide on reasonable figures for these parameters early in a study than try to objectively determine them at the end of the study. Appropriate infrastructure costs and equivalencies for two possible near-term exploration objectives, Luna and Mars, are provided in Table 3.2.1 and Table 3.2.2. The listed penalties for volume account for primary structure only, including micrometeoroid and orbital debris protection and radiation protection for the crew, if necessary. Table 3.2.8 provides information on secondary structure, including the racks and conditioned volumes such as refrigerated spaces.

The nominal values listed in Table 3.2.1 and Table 3.2.2 correspond to current technology with few improvements or synergistic advantages. Less conservative values, with comments on applicability, are presented in Table 3.2.4, Table 3.2.11, and Table 3.2.14.

Infrastructure costs vary according to the external mission environment, the technologies used, the mission duration, and sometimes other factors. For example, a power system using solar photovoltaic generation to provide electrical power for a transit vehicle has different energy storage requirements than a comparable system with the same architecture for an equatorial lunar base. Likewise, the thermal environment of interplanetary space differs from the thermal environment of the lunar or Martian surface. The tables here include values for surface locales indicative of equatorial sites. Studies at polar sites should use very different values, especially for thermal control.

Table 3.2.1 and Table 3.2.2 provide two volume cost factors. The first entry, for shielded volume, reflects pressurized primary structure with sufficient radiation protection to provide a safe environment for the crew. The second entry, for unshielded volume, models pressurized primary structure without any radiation protection other than what the pressure shell may provide. The crew will spend limited time within pressurized volume without radiation protection. Thus, the former value applies to technologies and equipment that are susceptible to environmental radiation or require significant crew interaction while the latter may be used for technologies and equipment that are insensitive to interplanetary radiation and require little crew interaction. The fourth entry is for thermal control. These values are combined here for convenience.

---

specifications for an actual ELS integrated testing facility may differ from those listed here. However, the values here are likely representative of an integrated bioregenerative research facility and, by analog, to a long-duration extraterrestrial surface facility.

[18] The BIO-Plex pressure control system was envisioned to maintain the internal facility pressure close to the external pressure to minimize the pressure gradient across the facility structure, and thereby, in theory, minimize gas exchange via leakage between the interior and exterior of the facility.

Table 3.2.1 Long-Duration Luna Mission Infrastructure Costs

Parameter	Units	Assumptions lower	nominal	upper
Transit				
Shielded Volume	kg/m³		80.8 (1)	
Unshielded Volume	kg/m³		45.2 (1)	
Power	kg/kW		136 (2)	
Thermal Control	kg/kW	55 (3)	65 (3)	65 (3)
Crewtime [19]	kg/CM-h	6.09 (4)	6.09 (4)	7.42 (4)
Surface				
Shielded Volume	kg/m³	102.0 (1)	133.1 (1)	137.3 (1)
Unshielded Volume	kg/m³		9.16 (1)	13.40 (1)
Power	kg/kW	29 (2)	76 (2)	749 (2)
Thermal Control	kg/kW	97 (3)	102 (3)	246 (3)
Crewtime [19]	kg/CM-h	1.50 (4)	1.50 (4)	2.14 (4)

References

(1) See Table 3.2.4
(2) See Table 3.2.11
(3) See Table 3.2.14
(4) See Table 3.3.7

Table 3.2.2 Mars Mission Infrastructure Costs

Parameter	Units	Assumptions lower	nominal	upper
Transit				
Shielded Volume	kg/m³		215.5 (1)	219.7 (1)
Unshielded Volume	kg/m³		9.16 (1)	13.40 (1)
Power	kg/kW	10 (2)	23 (2)	n/a
Thermal Control	kg/kW		60 (3)	70 (3)
Crewtime [19]	kg/CM-h	0.565 (4)	0.565 (4)	0.728 (4)
Surface				
Shielded Volume	kg/m³		215.5 (1)	219.7 (1)
Unshielded Volume	kg/m³		9.16 (1)	13.40 (1)
Power	kg/kW	54 (2)	87 (2)	338 (2)
Thermal Control	kg/kW		146 (3)	170 (3)
Crewtime [19]	kg/CM-h	0.465 (4)	0.465 (4)	0.957 (4)

References

(1) See Table 3.2.4
(2) See Table 3.2.11
(3) See Table 3.2.14
(4) See Table 3.3.7

[19] These crewtime values originate from calculations supporting Metric (2005) which assumes different values than those listed for other elements of the infrastructure. However, the values here are of the same order of magnitude so that the crewtime values are of the correct order of magnitude. To be rigorous, crewtime infrastructure values should be computed based upon both the other infrastructure values assumed and the actual life support system configuration. However, when such information is not available, the values here may be used as approximations.

3.2.1 INFRASTRUCTURE COSTS BASED UPON THE EXPLORATION SYSTEMS ARCHITECTURE STUDY

ESAS (2005) presents the most detailed description of NASA's most recent concepts for a return to Luna, discussing both a shorter-duration Lunar Sortie and a longer-duration Lunar Outpost. While the Lunar Sortie approach is nearer-term, the Lunar Outpost is more likely to use ELS-developed technologies. LRM (2006) outlines a possible implementation for a Lunar Outpost based upon ESAS (2005) and applicable requirements issued to date. The values in Table 3.2.3 (LRM, 2006) reflect a Lunar Outpost mission. [20] Please note without reference to LRM (2006) Table 3.2.3 is incomplete and the reader is encouraged to consult the original source for a broader understanding. However, for those familiar with LRM (2006), a brief explanation may suffice. According to ESAS (2005), the Crew Exploration Vehicle primarily uses solar photovoltaic cells for power generation, although after separation of the Command Module (capsule) from the Service Module, all power is provided by batteries. Further, according to ESAS (2005), the Lunar Surface Access Module uses hydrogen-oxygen fuel cells located on the Descent Stage for primary power generation, so the appropriate power-mass penalty has a fixed contribution from the fuel-cell hardware, 166.2 kg/kW_e, and a time-dependent contribution from the reactants consumed, 0.528 kg/kW_eh. Following separation of the Ascent Stage from the Descent stage, all power aboard the Lunar Surface Access Module is provided by batteries. The thermal control infrastructure penalties are similar in that the time-independent values of those recommended for life support correspond to radiant rejection ***before*** module or stage separation, while the time-dependent components correspond to rejection using consumables ***after*** module or stage separation. [21] Because many life support systems function during all mission phases, both the time-independent and time-dependent thermal control penalties apply. [22] Finally, because this mission, as outlined in LRM (2006), has not been used for a computation of the Metric yet, there are no corresponding values for crewtime. [23]

Table 3.2.3 Lunar Outpost Mission Infrastructure Costs

Parameter	Units	Crew Exploration Vehicle	Lunar Surface Access Module	Lunar Outpost
Power				
Power-Mass Penalty	kg/kW_e	136.0	166.2	274.1 [24]
Energy-Mass Penalty, Batteries	kg/kW_eh	15.6	12.3	undefined
Energy-Mass Penalty, Reactants	kg/kW_eh	n/a	0.528	undefined
Thermal Control				
Acquired by Cabin Heat Exchangers	kg/kW_{th}	49.3	49.3	--
Acquired by Coldplates	kg/kW_{th}	11.8	8.8	--
Thermal Transport	kg/kW_{th}	25.9	15.8	--
Rejection by Radiators	kg/kW_{th}	12.3	8.5	--
Rejection by Consumables	$kg/kW_{th}h$	10.7	6.7	--
Recommended Values for Life Support Analyses [25]	kg/kW_{th}	50.0	33.1	31.6 [26]
	$kg/kW_{th}h$	10.7	6.7	--
Vehicle Structure				
Volume	kg/m^3	133.8	61.7	100.0

20 Some values in Table 3.2.3 may also apply to a Lunar Sortie mission.

21 Both the Crew Exploration Vehicle and the Lunar Surface Access Module may use consumables to supplement rejection before separation during particularly hot mission segments, so this direction is an approximation.

22 Alternately, for life support hardware that is ***not*** used following vehicle separation, only the time-independent thermal control penalty applies.

23 Values from Table 3.3.7 for Luna are good approximations in the absence of customized values.

24 Solar power generation with regenerable fuel cells and cryogenic reactants for energy storage (ESAS, 2005). This value assumes a South-Pole site on the North Rim of Shackleton Crater.

25 See LRM (2006) for underlying assumptions and details.

26 For a South Polar site on the North Rim of Shackleton Crater with horizontal radiators with a power-mass penalty of 274.1 kg/kW_e.

3.2.2 PRESSURIZED VOLUME OR PRIMARY STRUCTURE COSTS

Pressurized volume houses the crew and crew-accessible systems. Characteristic volume costs are presented in Table 3.2.4. The International Space Station (ISS) common module currently provides pressurized volume in low-Earth orbit. Alternately, an inflatable module could be used. In both cases, the lower value corresponds to primary structure with protection for micrometeoroids and orbital debris, while the upper value, if known, also includes some dedicated radiation protection.

The aerodynamic crew capsule in Table 3.2.4 is based on an ellipse sled and designed to aero-capture in the upper atmosphere upon returning to Earth (NASA, 2001a). The second entry reflects the crew cabin structure without radiation shielding while the first entry reflects the crew cabin with sufficient radiation shielding for a lunar transit mission. Nominally, according to concepts within NASA (2001a), crew vehicles for near-term lunar missions will aero-capture upon returning to Earth, so the nominal values here include thermal protection for aerodynamic heating.

Table 3.2.4 Cost of Pressurized Volume

	Assumptions [kg/m³]		
Technology/Approach	**lower**	**nominal**	**upper**
Low-Earth Orbit			
ISS Module (shell only)		66.7 (1)	
Inflatable Module	19.61 (2)	28.1 (2)	32.4 (2)
Lunar Mission – Transit			
Shielded Aerodynamic Crew Capsule (Ellipse Sled)		80.8 (3)	
Unshielded Aerodynamic Crew Capsule (Ellipse Sled)		45.2 (3)	
Lunar Mission – Surface			
Shielded Inflatable Module	102.0 (4) [27]	133.1 (4) [27]	137.3 (4) [28]
Unshielded Inflatable Module		9.16 (2) [29]	13.40 (2) [29]
Martian Mission – Surface [30]			
Shielded Inflatable Module [31]		215.5 (4) [27]	219.7 (4) [28]
Unshielded Inflatable Module		9.16 (2) [29]	13.40 (2) [29]

References

(1) Hanford (1997)
(2) See Table 3.2.6
(3) NASA (2001a)
(4) See Table 3.2.7.

The cost factors listed for inflatable modules, both for the lunar and martian missions, assume surface sites. The unshielded value reflects just the primary structure without any radiation protection, presuming that some "to be determined" in-situ resources, such as regolith, a natural cavern, or local atmosphere, will provide the necessary radiation protection. The nominal shielded value assumes sufficient radiation protection for the location assuming the surface locale provides no beneficial protection against radiation, while the upper value for shielded volume also includes avionics and power management and

---

27 Estimate based on primary structure plus shielding mass.

28 Estimate based on all listed module masses, including avionics and power management and distribution.

29 Estimate based on primary structure mass only. Habitats sited on a planetary surface might use in-situ resources for radiation shielding and micrometeoroid protection. Additional equipment may be required to construct such shielding, but the associated mass should be considerably less than the corresponding masses from Earth.

30 Transit vehicles for Martian missions are generally larger, based on current concepts, so volume-mass penalties for surface applications would also be suitable for transit applications.

31 These values are derived from hazards associated with interplanetary space transit. Vehicles on the surface of Mars would receive some beneficial shielding from the local Martian environment, but the extent of that shielding is unclear.

distribution masses. Often, however, this last cost is associated with the Power External Interface and, therefore, should not also be assessed against the structure mass.

In recent studies, transit vehicles for Martian missions are generally larger than corresponding vehicles for lunar missions, so the volume-mass penalties for surface applications are suitable for transit applications. In fact, the radiation protection values for the Martian missions are sized assuming a crew is present during transfer to Mars. Because Mars itself will provide some shielding, the transfer segment is the most severe environment and provides the criteria for sizing radiation protection.

The appropriate volume cost factor generally depends on the sensitivity of specific equipment to the external environment or whether the crew must regularly interact with the equipment. As noted above, in radiation intensive environments anywhere beyond the Van Allen Belts, cost factors for shielded volume should be used whenever equipment is sensitive to radiation or must be frequently accessed by the crew. This value reflects the cost of placing equipment within the primary crew cabin. The cost for unshielded volume applies whenever the technology is not sensitive to radiation but must remain within a pressurized environment. The crew might service such equipment infrequently. Finally, some technologies might be located outside the pressurized cabin. While this is unlikely for most life support equipment, the associated volume cost factor would be much less than the lower value, approaching zero.

Leakage is technology dependent. The specification for ISS modules is 83 kg leakage per module per year (0.18% per day), but tests have shown that the actual leakage rate is significantly lower than this specification.

Currently the United States uses the ISS common module to provide pressurized volume. Alternately, inflatable modules have been suggested since the Apollo Program. TransHab (Kilbourn, 1998, and NASA, 1999), presented in Table 3.2.5, is a robust inflatable module designed for low-Earth orbit trials while attached to ISS. TransHab encloses 329.4 m³ within a primary shell with an inner surface area of 250.9 m². A connecting tunnel provides access to ISS with an additional 12.6 m³. The values in Table 3.2.5 include micrometeoroid protection and a storm shelter for radiation protection in low-Earth orbit against solar particle events. Less substantial inflatable modules could be used on a planetary surface if in-situ resources, such as regolith or caverns, provide meteoroid and radiation protection. Finally, the ISS common module and TransHab are designed using different design philosophies, so a rigorous comparison between the two approaches is not intended. Rather, the values here document both approaches.

Table 3.2.5 Masses of Inflatable Shell Components

Item	Mass [kg]	References
Inflatable Shell Assembly, including Liner, Bladder, and Restraint	1,265	Based on TransHab technology. See Kilbourn (1998), NASA (1999), and Atwell and Badhwar (2000)
Multi-Layer Insulation	235	
Micrometeoroid and Orbital Debris Protection	3,208	
Other (Windows, Deployment and Attachment Systems)	204	
Central Core Structure, including End Cones	1,405	
Water Containment [32] (Enclosing 18.8 m³ and covering 40.1 m²)	142	
Radiation Protection Media (A 0.0574 m thick water shield)	2,304	
Initial Inflation System	502	
Avionics and Power Management and Distribution	1,398	
Total Mass	10,663	

Based on Table 3.2.5, several cost factors for various configurations of the components presented are possible. See Table 3.2.6. While each configuration is not independently viable, they provide background for other estimates. The applicable volume is 329.4 m³.

[32] The water tank surrounding the crew quarters is actually integrated with the central core structure.

Table 3.2.6 Estimated Masses and Volume-Mass Penalties for Inflatable Module Configurations

Configuration	Mass [kg]	Volume-Mass Penalty [kg/m³]	Volume-Mass Penalty [m³/kg]
All listed Inflatable Module components listed in Table 3.2.5	10,663	32.37	0.0309
Previous Option without Avionics and Power Management and Distribution	9,265	28.13	0.0355
Primary Shell and Central Core Only	3,016	9.16	0.1092
Previous Option plus Multi-Layer Insulation and Micrometeoroid and Orbital Debris Protection	6,459	19.61	0.0510
Previous Option plus Initial Inflation System	6,961	21.13	0.0473
Previous Option plus Avionics and Power Management and Distribution	8,359	25.38	0.0394
Avionics and Power Management and Distribution alone	1,398	4.24	

Table 3.2.7 presents estimates for masses and volume-mass penalties for several configurations of inflatable modules. The first estimate, based on findings reviewed by Duffield (2001), uses 0.0622 m of hydrogen-impregnated carbon nanofibers to protect the crew quarters from solar particle events. Such a configuration is designed for a lunar mission. The assumed containment mass is 5% of the total shielding material mass. The second estimate assumes 0.0622 m of hydrogen-impregnated carbon nanofibers surround the entire crew cabin. The third estimate assumes 0.100 m of water surround the entire crew cabin for a lunar mission, which is a common "rule of thumb" in some recent design scenarios. Again, this shielding only protects against solar particle events. The containment mass, based on Kilbourn (1998), is 6.2% of the shielding material mass. Finally, the last estimate employs 2.43 m of liquid hydrogen to shield against both solar particle events and galactic cosmic radiation. See Duffield (2001). The assumed containment mass is 50% of the shielding material mass, and this is likely a lower limit.

The options in Table 3.2.7 differ from each other and reflect different commonly proposed design alternatives. The third option, using 0.100 m of water for a lunar mission, is a reference value because the protection is inferior compared to the other lunar options and it is insufficient to shield the crew cabin versus the expected radiation environment.

Table 3.2.7 Estimated Masses for Inflatable Modules

Item (Based on TransHab Architecture)	Mass for Lunar Mission [kg]	Mass for Lunar Mission [kg]	Mass for Lunar Mission [kg]	Mass for Martian Mission [kg]
Primary Structure Mass (Core, Shell) (1) [33]	6,961	6,961	6,961	6,961
Shielding Mass is 0.0622 m of Hydrogen-Impregnated Carbon Nanofibers Around Crew Quarters (2)	5,618			
Tankage (5 %) (3)	281			
Shielding Mass is 0.0622 m of Hydrogen-Impregnated Carbon Nanofibers Around Full Shell (2)		35,119		
Tankage (5 %) (3)		1,756		
Shielding Mass is 0.100 m of Water Around Full Shell			25,094	
Tankage (6.2 %) (4)			1,556	
Shielding Mass is 2.43 m of Liquid Hydrogen Around Full Shell (2)				42,685
Tankage (50 %) (5)				21,342
Total Mass	12,860	43,836	33,611	70,988
Volume-Mass Penalty [kg/m³]		133.1	102.0	215.5
[m³/kg]		0.007514	0.009799	0.004640

References

(1) Kilbourn (1998) and NASA (1999)
(2) Duffield (2001)
(3) Estimated
(4) Computed from Kilbourn (1998)
(5) Assumed (This value is probably a lower limit on the actual tank mass.)

Including the avionics and power management and distribution masses, as listed in Table 3.2.6, adds an additional 4.24 kg/m³ to the volume-mass penalties listed above. However, these masses are often accounted for in other factors, such as the power-mass penalty. Without radiation shielding or micrometeoroid protection, the primary shell and structure of the inflatable module has a volume-mass penalty of 9.157 kg/m³ or 0.1092 m³/kg. This would be an appropriate estimate for a habitat shielded by local resources, whether regolith or in a natural feature such as a lava tube or cavern.

3.2.3 SECONDARY STRUCTURE COSTS

The values in the previous tables quantify the vehicle's primary structural mass, including the pressure vessel and radiation shielding. However, many systems also require additional secondary structure, such as a payload rack, drawers, or refrigeration. Based on data from the International Space Station Program (Green, *et al.*, 2000), Table 3.2.8 provides estimates for secondary structure masses. Though somewhat simplistic, the volume, power, and thermal control for equipment housed within or mounted to secondary structure is assumed to be identical to the values for the uninstalled piece of equipment. Assuming a piece of equipment is not mounted directly to the vehicle primary structure, most are mounted to an International Standard Payload Rack. Small items are placed within trays and drawers of a stowage rack, while some foodstuffs and experiments require the chilled climate provided by a refrigerator or freezer. For example, 100 kg of food stored within a refrigerator would incur a secondary mass penalty of 136 kg in addition to any power, thermal control, or volume penalties, while a 100 kg

[33] See the fifth configuration in Table 3.2.6.

pump mounted to the vehicle floor would have no associated secondary mass, though power, thermal control, and volume – to account for primary structure – might still apply.

Table 3.2.8 Secondary Structure Masses

Mounting Configuration	Secondary Structure Mass per Mass of Equipment [kg Secondary Structure /kg Equipment]	Internal Cargo Volume [m³]
Directly to Primary Structure (No Secondary Structure)	0.00	n/a
Directly to International Standard Payload Rack	0.21	1.57
Within Trays of a Stowage Rack	0.80	0.9
Within Refrigerator/Freezer Rack	1.36	0.614 (1)

References
Information from Green, *et al.* (2000) except as noted.
(1) Toups, *et al.* (2001)

The external volume for an International Standard Payload Rack is 2.00 m³ (Rodriguez and England, 1998). The Stowage Rack and the Refrigerator/Freezer Rack are derived from the International Standard Payload Rack and have the same external dimensions.

3.2.4 POWER COSTS [34]

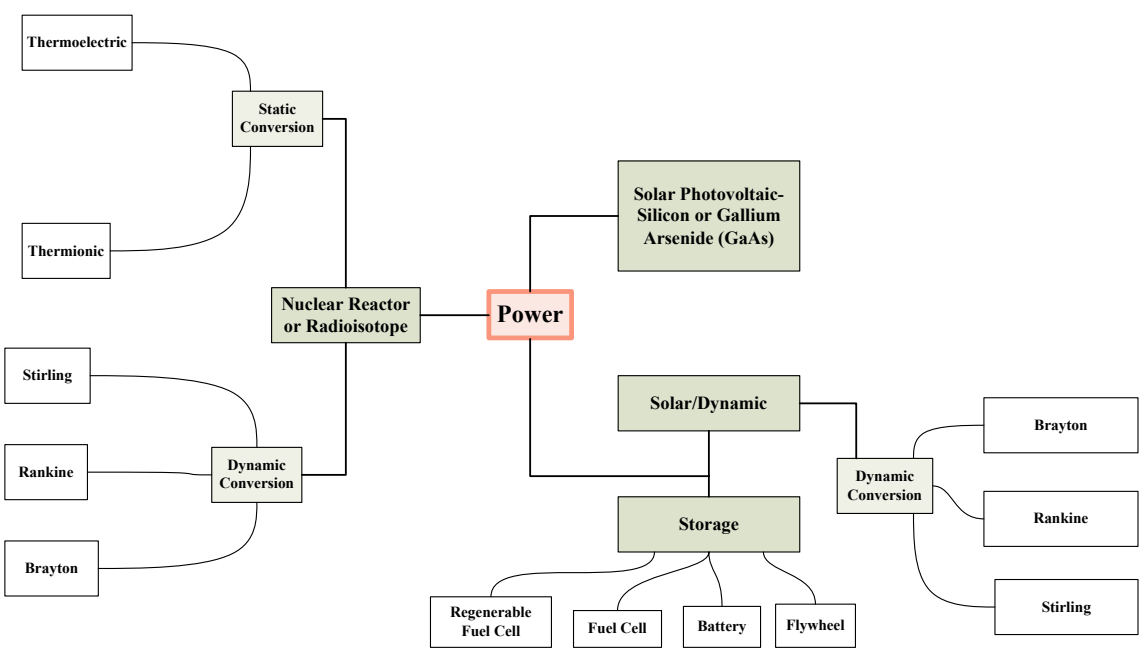

Figure 3.2.1 Power Generation and Storage Options Considered

Options for power generation, recovery, and storage considered here, and their general inter-relationship, are presented graphically in Figure 3.2.1. Table 3.2.11 outlines the power options with data available from the literature. Consideration was given to all the processes listed in Figure 3.2.1, but the table presents only those technologies with available data. The generalized cycles and processes are briefly discussed in the following paragraphs.

[34] The editor wishes to thank Robert L. Cataldo of the NASA's Glenn Research Center for his inputs and poignant comments on the makeup and structure of this power section.

Figure 3.2.1 lists the solar and nuclear power options considered for near-term human exploration missions. The three cycles presented here are dynamic conversion cycles: the Rankine, Brayton, and Stirling cycles. These cycles are applicable for conversion of heat to current flow whether the heat is generated by an environmental source such as the Sun or possibly heat produced by nuclear fission or radioisotopic decay. Dynamic cycles may emit vibrational loads, but they can be integrated with or into balanced machines. Static cycles, though lacking vibrational emissions, are typically less efficient than their dynamic counterparts. Each cycle has attractive features which tend to manifest at different locations and operating conditions.

The Rankine cycle operates via a working fluid phase change. The working fluid is typically a liquid metal or an organic fluid. At constant pressure, which is typical for this approach, the process offers isothermal heat rejection. Because the heat-rejection-phase of power generation is isothermal, power can be obtained at relatively low operating temperatures and, theoretically, at higher efficiencies than the Brayton cycle. The Rankine cycle uses a liquid, typically a liquid metal, which passes through a heat exchanger to vaporize a working fluid, which then passes through turbo machinery, releasing work, and recondenses.

Characteristic of the Brayton cycle is a single-phase working fluid which typically requires smaller radiators. The cycle is often used in a turbine to convert heat to current flow by pressurizing the air in a piston, adding fuel, and then igniting the mixture to trigger an expansion cylinder. The expanding gas drives a turbine releasing work.

The Stirling cycle is also single-phase with efficiencies theoretically close to those of the ideal Carnot cycle. The Stirling cycle uses a fixed mass of gas sealed inside the engine. Stirling engines are quiet since there are no explosions or high pressure gases releases. The process is controlled by external heating and cooling of the sealed gas. The major drawback of this cycle is the relatively slow response time of the sealed gas to external heating and cooling. Thus, this cycle tends to favor smaller engines at lower power levels, so if larger amounts of power are needed several smaller reactors operate in parallel which increases overall system mass.

A comparison of the Brayton, Rankine and Stirling Power Module Characteristics (Frisbee and Hoffman, 1993), based on the SP-100 Nuclear Reactor Proposal for Mars Cargo Missions, is given in Table 3.2.9.

Table 3.2.9 Power Module Characteristics for Nuclear Reactor Proposals [35]

Item	Units	Rankine	Cycle Stirling	Brayton
Reactor Full Power Projected Operating Life	y	7.4	9.6	7.6
Operating Temperature	K	1,355	1,355	1,355
Average Radiator Temperature	K	788	567	469
Radiator Platform Area	m²	90	183	531
Radiator Physical Area	m²	128	282	821
Auxiliary Radiator Area	m²	25	25	25
Stowed Dimensions				
Length	m	12.2	16.9	28.3
Diameter	m	5.5	5.5	5.5
Number of modules /launch	--	3	2	1
Power Module Masses				
Reactor and Controls	kg	841	841	841
Shield	kg	1,396	1,396	1,396
Primary Heat Transport	kg	895	807	1,104
Power Conversion System	kg	933	6,293	3,302
Heat Rejection & Transport	kg	1,066	420	1,157
Heat Rejection Radiator	kg	1,733	3,078	7,063
Parasitic Load Radiator	kg	140	140	140
Total Module Mass	kg	7,004	12,975	15,003
Module Power and Efficiency				
Thermal Power	kW_{th}	2,356	1,850	2,309
Electric Power, gross	kW_e	578	596	582
System Power	kW_e	6	20	10
Net Power	kW_e	572	576	572
System Efficiency	%	24	31	25
System Power-Mass Penalty [36]	kg/kW_e	12	23	26

Several static conversion approaches exist. Two approaches that are of interest to NASA are thermionic and thermoelectric energy conversion. Several approaches also exist to make use of local insolation. The most prevalent are solar photovoltaic cells and solar dynamic systems, while thermionic Photon Chips™ are a recent development.

Thermionic energy conversion is the direct production of electric power from heat by thermionic electron emission. From a thermodynamic viewpoint, it is the use of electron vapor as the working fluid in a power-producing cycle. A thermionic converter consists of a hot emitter electrode from which electrons are vaporized by thermionic emission and a colder collector electrode into which they are condensed after conduction through the inter-electrode plasma. The resulting current, typically several amperes per square centimeter of emitter surface, delivers electrical power to a load at a typical potential difference of 0.5-1 volt and thermal efficiency of 5–20%, depending on the emitter temperature (1,500–2,000 K) and specific mode of operation.

---

35 Brayton, Rankine, and Stirling power module characteristics according to Frisbee and Hoffman (1993). The assessments are sized based on the SP-100 nuclear reactor proposal for Mars cargo missions with approximately 600 kW_e of total power capacity. Note that most near-term to mid-term mission scenarios do not require that much power on the surface of Mars.

36 This quantity is also known in the literature as the "system specific mass."

Thermoelectric systems rely on the Seebeck effect where two dissimilar materials create a voltage at the material interface when exposed to a temperature gradient. Systems relying on thermoelectric conversion tend to have low efficiencies.

Solar photovoltaic (PV) cells have powered NASA probes in the inner Solar System for decades and, more recently, the International Space Station. According to ESAS (2005), solar PV cells are likely to power the Crew Exploration Vehicle. Finally, solar PV cells are being considered for human vehicles on the surface of Mars where temperatures vary from 130 K to 300 K. Cell performance increases with decreasing temperature, with peak efficiencies occurring at 150-200 K according to Landis and Appelbaum (1991). Some materials, such as silicon, increase in performance rapidly in PV cells at the relatively low temperatures found on Mars.

Solar dynamic systems for surface applications concentrate incident solar radiation using a spectral parabolic mirror and achieving high temperatures at a focal point to drive a generator. Local dust is an obstacle to this approach as the dust blocks some of the incident photons preventing them from reaching the collector.

Thermionic Photon Chips™ are a recent contribution from the field of quantum mechanics. Thermionic Photon Chips™ differ from conventional solar power technologies because they are photoelectric rather than photovoltaic. The differences between these two concepts could allow devices to be dramatically less complex to build than photovoltaic systems so they may be readily mass-producible. Photon Chips™ rely on the photoelectric effect which means that when light is shone on a substance, electrons (charge carriers) are emitted (removed) from that substance. Photon Chips™ incorporate this effect into a generator by providing a second substance, opposite the first, to collect the charge carriers that are emitted from the first substance. In this way a charge soon builds up on the substances. This charge is removed from the chip by connecting wires which convert the charge into electricity.

Choices among conversion cycles are quite complex and choices among theoretical advantages sometimes suffer from engineering challenges and do not realize their full potential. Some cycles do offer greater maturity. None of the cycles have demonstrated long-term reliability in space applications yet.

Recommendations have been made to address the gaps in Advanced Power Technologies for Crew Exploration Vehicle power systems, surface nuclear power systems, mobile power systems, high-efficiency power systems, and space transport systems, as noted in Table 3.2.10.

Table 3.2.10 Technologies Needed for Critical Capabilities [37]

	Critical Capability					
Technology	**Power Generation for Crew Exploration Vehicle**	**Surface Nuclear Power Systems**	**Surface Mobil Power Systems**	**High Efficiency Power Systems**	**Space Transpor-tation Power Systems**	**Surviv-ability, Long Life Compo-nents**
Solar Power	X		X	X	X	
Nuclear Power		X	X	X	X	
Energy Storage	X		X	X	X	
Intelligent Power Management and Distribution	X	X	X	X	X	
Advance Electrical Components	X	X	X	X	X	
Environmental Durability /Survivability	X	X	X	X	X	X

Table 3.2.11 lists many power system options. The table is divided into options by usage locale, power generation source, and vehicle type. Systems for similar vehicles are grouped together. Lee and Duffield (2006) provides additional details for many of the systems presented and this work should be consulted by readers who desire more than what are given below. Power mass penalties are provided in

[37] See Davis, *et al*. (2005).

terms of kg/kW$_e$ for power generation systems that do not use consumables, while energy storage devices with consumables or power generation via consumables are characterized by energy-mass penalties in terms of kg/kW$_e$h. Several systems below are rated separately for non-consumable power generation technologies and consumable storage technologies, and both factors should be assessed during for impacts on equivalent system mass if power is required when by the system under study when both power systems are in use during the projected mission. A brief discussion and further information on batteries (Table 3.2.12) and fuel cells (Table 3.2.13) follow Table 3.2.11.

Generally, solar power systems grow linearly with power required while nuclear power systems have a high initial cost, especially for shielding. With a nuclear power system, adding small amounts of generating capacity with respect to total power generating capacity adds little to the overall system mass. For example: starting with a 25 kW$_e$ nuclear plant with a mass of 6000 kg; doubling the power output to 50 kW$_e$ increases the overall mass to approximately 8000 kg. Doubling the power output to 100 kW$_e$ increases the mass to around 11,000 kg (Cataldo, 2006).

Table 3.2.11 Power Option Summary

System	kg/kW$_e$	kg/kW$_e$h	Comments
Static Power Options in Low Earth Orbit[38]:			
Concentrating Photovoltaic Cells; Solar Photovoltaic Cells w/o Storage (1)	n/a		34 to 40% efficient projected in 8-11 years; Department of Energy Projection
Solar Concentrator w/ Static Thermionic Power Production (2, 3)	3		56 to 72% efficient producing 5 to 10 kW$_e$
Solar Photovoltaic Cells w/ Hydrogen Oxygen Fuel Cell Storage (4, 5, 6)	41	1.1	11% efficient producing 100 kW$_e$; Shuttle technology with a six day mission or Lunar base solar power plant study.
Solar Photovoltaic Cells w/o Structure w/o Energy Storage Structure (Calculated from 5, 7, 8, 9, 10)	101		10 to 15% efficient producing 28 kW$_e$; Subtracted the mass of the structure batteries and related items.
Solar Photovoltaic Cells w/ Battery Storage (5, 7, 8, 10)	133	20.8	10 to 15% efficient producing 28 kW$_e$; Does not include the main supporting truss (P6); ISS
Solar Photovoltaic Cells w/ Battery Storage (5, 11)	166 [39]	20.8	20% efficient is the goal for thin film solar arrays; 35-40% efficient is the goal for advanced concepts producing 100 kW$_e$; [40] Best specific power to 1991 for earth orbit solar intensity.
Solar Photovoltaic Cells w/o Storage; Includes Support Structure (4, 11)	239		Up to 14% efficient; In sun power only with deployable PV cells
Solar Photovoltaic Cells w/ battery storage (4)	476	29	10 to 15% efficient producing 28 kW$_e$; Continuous power with deployable cells.

References

(1) Mehos, *et al.* (2001)
(2) Piñero, *et al.* (2002)
(3) Littman (1994)
(4) Hanford and Ewert (1996)
(5) Lee and Duffield (2006)
(6) Eagle Engineering (1988)
(7) Landis, *et al.* (1999)
(8) Eagle-Pitcher (2003)
(9) ISS (1999)
(10) Patel (2005)
(11) Landis and Appelbaum (1991)
(12) Mason (1999a)
(13) Mason (1999b)

38 Specific Power is usually given for low Earth orbit conditions. Values at the surface of Mars can be estimated by multiplying by the ratio of Mars solar intensity to low Earth orbit solar intensity according to Landis, *et al.* (1999).

39 Projected value based on components.

40 Flight tested system is 15 kg/kW$_e$ (Landis and Appelbaum, 1991). Current system is 7.7 kg/kW$_e$. Combining existing technology with gallium-arsenide, GaAs, at 3.3 kg/kW$_e$, adds to the existing technology specific mass.

System	kg/kW$_e$	kg/kW$_e$h	Comments
Dynamic Conversion Power Options in Low Earth Orbit:			
Solar Concentrator w/ Brayton Dynamic Power Production [12, 13]	1.4		35% efficient producing 10 MW$_e$
Solar w/ Stirling Dynamic Power Production [6]	405		26% efficient producing 100 kW$_e$

Table 3.2.11 Power Option Summary (continued)

System	kg/kW$_e$	kg/kW$_e$h	Comments
Nuclear Power Options for Low Earth Orbit			
Nuclear w/ Brayton Dynamic Power Production [14]	10		n/a efficient; Reactor: 250 kW$_e$
Nuclear w/ Brayton Dynamic Power Production [14]	23		n/a efficient; Reactor: 75 kW$_e$
Nuclear w/ Static Alkali Metal Thermal-to-Electric Power Production [15]	34		n/a efficient; Reactor: 100 kW$_e$
Nuclear w/ Brayton Dynamic Power Production [16]	50		n/a efficient; Reactor: 50 kW$_e$ [41]
Nuclear w/ Static Thermoelectric Power Production [14]	75		n/a efficient; Reactor: 14 kW$_e$
Nuclear w/ Stirling Dynamic Power Production [17]	649		n/a efficient; Reactor: 3 kW$_e$
Crew Exploration Vehicle Power Option			
Crew Exploration Vehicle [18]	136		n/a efficient producing 10 kW$_e$; (9 kW$_e$; 2 × 28 volt gallium-arsenide Solar PV arrays).
Transit Moon or Mars			
Nuclear w/ Brayton Dynamic Power Production [14]	10		n/a efficient producing 250 kW$_e$
Mars Sample Return [19]	10.5		17.5% efficient producing 8.5 kW$_e$; Inflatable structure
Nuclear w/ Brayton Dynamic Power Production [14]	23		n/a efficient producing 75 kWe
Nuclear w/ Rankine Dynamic Power Production and Magnetohydrodynamic Power Production [20]	48		54% efficient; 60% efficient for thrusters; producing 1.5 MW$_e$
Earth-Luna Transit Hybrid Solar Array System [21]	237	10	n/a efficient; PV arrays + batteries and fuel cells
Nuclear w/ Stirling Dynamic Power Production [17]	649		n/a efficient producing 3 kW$_e$; Includes battery and shielding (60% of the total mass)

References

[14] Berte and Capell (1998)

[15] El-Genk and Tournier (2003)

[16] Lipinski, *et al.* (2002)

[17] Elliot, *et al.* (2003)

[18] ESAS (2005)

[19] Derbés (1999)

[20] Frisbee and Hoffman (1996)

[21] NASA (2001a)

[41] There are many cases presented in Lee and Duffield (2006) for solar collectors in conjunction with Brayton power production. Use of other heat cycles, such as Stirling or Rankine, may result in lower mass, but such approaches also add system complexity and immaturity. This is especially true of the Rankine cycle (Lahey and Dhir, 2004).

Table 3.2.11 Power Option Summary (continued)

System	kg/kW_e	kg/kW_eh	Comments
Solar Conversion Power Options on the Surface of Luna			
Solar Voltaic Power generation at Lunar Equator w/o Storage [22, 23]	54		n/a efficient; Tracking PV arrays
Solar w/ Stirling Dynamic Power Production [6]	405		26% efficient producing 100 kW_e
Solar Voltaic Power Generation at Lunar Equator w/ Fuel Cell Storage [22, 23]	749	4	n/a efficient; Tracking PV arrays
Nuclear Conversion Power Options on the Surface of Luna			
Nuclear w/ Brayton Dynamic Power Production [24]	29		n/a efficient producing 550 kW_e
Nuclear w/ Brayton Dynamic Power Production [25]	76		n/a efficient producing 20 kW_e
Nuclear refractory reactor w/ Brayton Dynamic Power Production; Luna or Mars [26]	77 [42]		23.5% efficient producing 55 kW_e; direct high-temperature Brayton
Nuclear refractory reactor w/ Stirling Dynamic Power Production; Luna or Mars [26]	149		23.5% efficient producing 31 kW_e; Lithium liquid metal
Nuclear refractory reactor w/ Thermoelectric Power Production; Luna or Mars [26]	349		4.1% efficient producing 16 kWe; Lithium and SiGe
Nuclear Fission w/ Brayton dynamic conversion [27]	125		n/a efficient producing 50 kW_e
Nuclear Fission w/ Stirling dynamic conversion [27]	120		50 kW_e
Nuclear Fission w/ thermoelectric static conversion [27]	136		50 kW_e

References

[6] Eagle Engineering (1988)
[22] Hughes (1995)
[23] Ewert, *et al.* (1996)
[24] Harty and Durand (1993)
[25] Juhasz and Bloomfield (1994)
[26] Mason (2006)
[27] Kerslake (2005)

[42] A comparison with a stainless steel reactor resulted in superior performance for the refractory reactor for Brayton, Stirling, and Thermoelectric options (Mason, 2006).

Table 3.2.11 Power Option Summary (concluded)

System	kg/kW_e	kg/kW_eh	Comments
Solar Conversion Power Options on the Surface of Mars			
Solar Photovoltaics w/o Storage [28]	149		28% efficient; Static solar power at an equatorial site on Mars
Solar Photovoltaic Cells w/ Fuel Cell Storage [29]	178	10	30% efficient; PV cell; Power generated at an equatorial site on Mars
Solar Photovoltaic Cells w/ Fuel Cell Storage [29]	228	10	20% efficient; Power generated at an equatorial site on Mars
Solar Photovoltaic Cells w/ Fuel Cell Storage [28]	338	n/a	Static solar power at an equatorial site on Mars
Nuclear Conversion Power Options on the Surface of Mars			
Nuclear w/ Static Thermionic Power Production [2]	3		92% efficient; Designing a 5 to 10 kW_e Power unit
Nuclear w/ Static Thermoelectric Power Production [29]	54		n/a efficient; Emplaced in excavated hole; Excavation equipment is included
Nuclear w/ Static Thermionic Power Production [3]	55		n/a efficient producing 75 kW_e; Conceptual design
Nuclear w/ Static Thermoelectric Power Production [29]	75		22% efficient producing 160 kW_e; On a self-deployed cart two kilometers from base.
Nuclear w/ Static Thermoelectric Power Production [3]	87		n/a efficient producing 100 kW_e; On independent lander
Small Radioisotope Power Systems [30]	88		n/a efficient producing 2 kW_e
Nuclear w/ Stirling Dynamic Power Production [29]	88		n/a efficient producing 100 kW_e; Shielding included; Conceptual design; Stirling Engine
Nuclear w/ Static Thermionic Power Production [3]	107		n/a efficient producing 25 kW_e; Conceptual design
Nuclear w/ Static Thermoelectric Power Production [29]	226		n/a efficient producing 100 kW_e; On mobile cart; Shielding included

References

[2] Piñero, *et al.* (2002)
[3] Littman (1994)
[28] NASA (1989)
[29] Cataldo (1998)
[30] Hoang, *et al.* (1988)

Energy storage devices for spacecraft with human crews come in two common forms, which are batteries, per Table 3.2.12, and fuel cells, per Table 3.2.13. The differences between batteries and fuel cell capabilities are not easy to discern. The rate and quantity of a battery discharge cycle is not equivalent to the availability of energy from a fuel cell. After installing a fuel cell's components, a fuel cell will output its full rated power continuously if supplied sufficient reactants. A battery, however, degrades with each discharge cycle and must be replaced more frequently than the components of a comparable fuel cell.

Table 3.2.12 Characteristics of Advanced Rechargeable Batteries [43]

Battery Technology	Cell Energy Density [W•h/L]	Cell Specific Energy [W•h/kg]	Operating Temperature [°C]	Number of Discharge Cycles in Cell Life [Cycles]	Depth of Discharge per Cycle [%]	Technology Readiness Level
"State of the Art" Nickel-Hydrogen ($Ni-H_2$)	40 to 50	30 to 40	-5 to 30	60,000	30	9
Lithium-ion with Liquid Electrolyte	200 to 300	100 to 150	-40 to 65	1,500	60	5 to 9
Lithium-Solid Polymer Electrolyte	300 to 450	> 200	0 to 80	1,500	60	3
Lithium-Solid Inorganic Electrolyte	> 300	> 200	0 to 80	> 10,000	60	1 to 2

Table 3.2.13 Advanced Fuel Cell Systems [44]

Technology	Energy-Mass Penalty [kg/kW$_e$h]	Lifetime	Technology Readiness Level
"State of the Art" Alkaline Fuel Cell	8 [45]	n/a	9
Polymer Electrolyte Membrane	4	n/a	4 to 5
Direct Methanol	4.5 [46]	n/a	2 to 4
Solid Oxide	n/a	n/a	2 to 3 [47]
Regenerative Systems based on Polymer Electrolyte Membrane or Solid Oxide	n/a	n/a	3

3.2.5 THERMAL CONTROL COSTS

Table 3.2.14 presents options for thermal control costs assuming an internal and an external thermal control system. Internal thermal control system masses primarily depend on the overall thermal load. External thermal control costs vary according to the magnitude of the thermal load and the ease of rejecting thermal loads from the vehicle and, therefore, depend heavily on both site and vehicle configuration. The values in Table 3.2.14 are representative of typical external thermal control system costs for the conditions listed. Lighter, more cost-effective thermal control options exist, but the values here provide representative or typical values for most design studies. They assume a traditional thermal control system architecture employing both an internal and an external thermal control system.

- ***Note: The cost of a complete thermal control system is the sum of the internal thermal control system cost plus the appropriate external thermal control system cost.***
- ***Note: The inverse thermal-control-mass penalties, given in kW/kg, may not be summed directly. Rather, only the reciprocal values, given in terms of kg/kW, may be summed directly.***

43 See Davis, *et al.* (2005).
44 Information from Davis, *et al.* (2005) except as noted.
45 See NASA (2002).
46 See Larminie and Dicks (2003) for details.
47 This technology is available commercially, but there has been little testing for aerospace applications.

Table 3.2.14 Advanced Mission Thermal Control Costs and Equivalencies

Internal Thermal Control System Cost			
Vehicle/Site Independent	**kg/kW**	**kW/kg**	**Comments**
Flow Loop with Heat Acquisition Devices	~25 (1)	~0.040	Half of the Heat Load is acquired by Coldplates.
External Thermal Control System Cost Options			
Transit or Low-Earth Orbit	**kg/kW**	**kW/kg**	**Comments**
Current Technology, Vehicles: Flow-Through Radiators Only	30.4 (2)	0.0329	Shuttle Technology: Aluminum, Body-Mounted Radiators with Silver Teflon Surface Coating.
Lightweight, Flow-Through Radiators Only	~20 (4)	~0.05	As above with Composite, Flow-Through Radiators.
Flow-Through Radiators with a Supplemental Expendable Cooling Subsystem	40.0 (2)	0.0250	"Current Technology, Vehicles," with an additional Flash Evaporator Subsystem.
Lightweight, Flow-Through Radiators with a Supplemental Expendable Cooling Subsystem	~30 (4)	~0.033	As above with Composite, Flow-Through Radiators
Current Technology, Space Stations: International Space Station [48]	323.9 (2)	0.00309	ISS Technology: Aluminum, Anti-Sun Tracking Radiators with Z-93 Surface Coating.
Surface – Luna	**kg/kW**	**kW/kg**	**Comments**
For an Equatorial Site using Horizontal Radiators with Silver Teflon Coating			
Current Technology: Flow-Through Radiators Only	221 (1)	0.0045	Aluminum, Surface-Mounted Radiators
Lightweight, Flow-Through Radiators Only	~190 (4)	~0.0053	As above with Composite Radiators.
Flow-Through Radiators + Solar Vapor Compression Heat Pump (SVCHp)	77 (1)	0.013	Aluminum, Surface-Mounted Radiators with SVCHp
Lightweight, Flow-Through Radiators with Solar Vapor Compression Heat Pump	~72 (4)	~0.014	As above with Composite Radiators.
Surface – Mars	**kg/kW**	**kW/kg**	**Comments**
For an Equatorial Site using Vertical Radiators with Silver Teflon Coating			
Current Technology: Flow-Through Radiators Only	~145 (3)	~0.0069	Aluminum, Surface-Mounted Radiators
Lightweight, Flow-Through Radiators Only	~121 (3)	~0.0083	As above with Composite Radiators.

References

(1) Estimated from Hanford and Ewert (1996) and Ewert, *et al.* (1999)
(2) Hanford and Ewert (1996)
(3) Estimated from Hanford and Ewert (1996) and Hanford (1998)
(4) Estimated.

Notes

- The cost of a complete thermal control system is the sum of the internal thermal control system cost plus the appropriate external thermal control system cost.
- ***Inverse values, given here in kW/kg, may not be summed directly.***

[48] The value includes significant structures to attach or rotate the thermal radiator clusters.

The values in Table 3.2.14 come from a variety of sources. The internal thermal control system values are derived from studies of a lunar base, but they are considered typical of other enclosed cabins. The transit vehicle external thermal control system estimates are based on Shuttle technology. The primary heat rejection technology is radiators while an evaporative device, a flash evaporator, provides supplemental cooling. Transit vehicle external thermal control system estimates are provided both with and without supplemental evaporative cooling devices. Because a vehicle cannot reject heat using radiant transfer while aero-capturing or entering a planetary atmosphere, some other technology, like evaporative cooling, supplements the radiators. Vehicles that do not experience aerodynamic heating may employ an external thermal control system without any evaporative cooling. The external thermal control system value for International Space Station includes significant penalties for thermal-control-system-specific structure that is not necessary for transit vehicles with their lesser heat loads. See Hanford and Ewert (1996) for a detailed disposition of International Space Station external thermal control system masses.

Options for cooling habitats at a lunar surface site rely on horizontal radiators. Some options also employ a vapor compression heat pump powered by a dedicated solar PV array. While the heat pump is only available while the Sun is above the local horizon, the radiators alone for this option are sized to reject the design load in the absence of sunlight. All options assume an equatorial site, which is the most severe for the lunar surface.

Finally, the external thermal control system options for the Martian surface employ only radiators sized for the worst environmental conditions expected at an equatorial site, which is a moderate dust storm, and assume that the environment does not impact the radiator surface properties. Sites in the Martian southern hemisphere can be more severe thermally than equatorial sites.

For each external thermal control system option above, less massive approaches are available with additional mission restrictions. In particular, the options listed with lightweight radiators are conservative approximations and research will reduce equipment masses further than these estimates imply. See Weaver and Westheimer (2002). Thus, the technologies here are generally available but are far from optimal for specific applications.

3.2.6 CREWTIME COSTS

Life support equipment requires crewtime for operations and maintenance. This time can be small for some systems and large for others. Notably for functions related to food – food production, food product preparation, meal preparation, and waste disposal – the crewtime may be very large. The cost of crewtime is derived from the life support system ESM and the crewtime available. Typical equivalencies vary from about 0.1 to 10 crewmember-hours per kg of ESM. Section 3.3.1.2 provides additional details.

3.2.7 LOCATION FACTORS

Location factors [49] describe the additional resources necessary to move a mass of payload from low-Earth orbit to some location elsewhere in space. The additional resources here refer to propulsion assets such as engines, fuel, tankage, and associated propulsion-related structure. [50] Specifically, a location factor represents the additional mass necessary in low-Earth orbit [kg] to push a mass of payload [kg] to a particular destination. Location factors allow comparisons between cases where all payloads do not share the same transportation history. In other words, one payload option may stay entirely aboard one vehicle during the entire mission, while another payload option may jettison mass midway through the mission and thus reduce its associated propulsion costs for the remainder of the mission. ESM GD (2003) details the use of location factors within equivalent system mass assessments.

Location factors for two destinations, Luna and Mars, are presented in Table 3.2.15. Estimates for Mars assume the Mars Dual Lander architecture, while estimates for Luna are based on the L_1 Gateway architecture. Values for Luna based on ESAS (2005) are presented in LRM (2006). Both sets of estimates in Table 3.2.15 assume chemical propulsion and aero-braking when possible. [51]

---

[49] Some researchers use the term "gear ratio" for "location factor." However, these terms refer to the same concept.

[50] Recall that cabin structure, power, thermal control, and crewtime costs or penalties are already assessed with other factors.

[51] Advanced propulsion concepts may yield much lower location factors in the future, but development of advanced propulsion systems for human spaceflight currently has high programmatic risks.

Transfer Vehicles travel from low-Earth orbit to either Luna or Mars orbit, and return to low-Earth orbit. The first estimate is for a complete trip to and from the celestial body listed, while the second estimate is for payloads that only travel to the celestial body listed and then remain behind when the Transfer Vehicle returns.

Landers travel from low-Earth orbit to either the Lunar or Martian surface and, in some cases, back to orbit. For example, within the Mars Dual Lander architecture there are two landers. The first, the Mars Descent / Ascent Lander, travels to Martian orbit robotically. In orbit, the Mars Transit Vehicle rendezvous with the Mars Descent / Ascent Lander and the crew transfers to the latter vehicle for the trip to the Martian surface. At the end of the surface stay, the Mars Descent / Ascent Lander returns the crew to Martian orbit and the Mars Transit Vehicle for the trip back to Earth. The second lander, the Surface Habitat Lander, travels and lands robotically on Mars. The crew transfers to the Surface Habitat Lander once they are on the surface. [52]

Table 3.2.15 Location Factors for Near-Term Missions

Mission Element (Segment)	Location Factor [kg/kg] lower	nominal	upper
Luna			
Lunar Transfer Vehicle (Full Trip)		6.36 (1)	
Lunar Transfer Vehicle (Earth Orbit to Lunar Orbit Only)		4.09 (2)	
Lunar Lander (Earth Orbit to Lunar Surface and back to Lunar Orbit)		11.78 (1)	
Lunar Lander (Earth Orbit to Lunar Surface Only)		5.98 (1)	
Mars [53]			
Mars Transfer Vehicle (Full Trip)	5.77 (1)	5.77 (1)	10.14 (1)
Mars Transfer Vehicle (To Mars Orbit Only)	2.16 (2)	2.16 (2)	3.37 (2)
Mars Lander (Earth Orbit to Martian Surface and back to Martian Orbit)	9.50 (1)	9.50 (1)	14.83 (1)
Mars Lander (Earth Orbit to Martian Surface Only)	2.77 (1)	2.77 (1)	4.33 (1)

Reference

(1) Geffre (2003)
(2) Geffre (2004)

Per ESM GD (2003), location factors multiply the equivalent system masses to which they apply. The location factors given in Table 3.2.15 have units of "kilograms of total vehicle in low-Earth orbit divided by kilograms of life support hardware [payload] in low-Earth orbit." Thus, an equivalent system mass corrected for location is the product of the equivalent system mass contributions due to the physical attributes of the hardware and the location factor.

Example: A piece of equipment with an equivalent system mass of 2.0 kg as payload on a Mars Transfer Vehicle using nominal technology would have an equivalent system mass corrected for location of 11.54 kg if it remains on board during the entire mission from Earth, to Mars, and back again to Earth. Or, equivalently, this value may be expressed as an equivalent system mass is 2.0 kg for the payload hardware and other payload equivalencies and an additional 9.54 kg in equivalent system mass for propulsion and other vehicle infrastructure in low-Earth orbit to move the payload to Mars and back.

Alternatively, location factors in Table 3.2.15 may be expressed as ratios. Thus, the location factor for a full trip to and from Mars aboard a Mars Transfer Vehicle may be expressed as 5.77 kg of additional mass in low-Earth orbit for every 1 kg of payload that travels to Mars and back, or, in shorthand notation, 5.77:1. Using this approach yields the same result as the second form in the example above.

---

52 "Mars Transit Vehicle," "Mars Descent / Ascent Lander," and "Surface Habitat Lander" are specific names for vehicles from the Mars Dual Lander architecture. "Transfer Vehicle" and "Lander" are more generic names used here to differentiate between two types of vehicles that commonly appear in NASA advanced studies.

53 Mars Dual Lander architecture.

3.3 CREW CHARACTERISTICS

As the life support system's primary purpose is to maintain the crew, the crew characteristics will drive equipment requirements. From an analysis perspective, the human metabolic rate and available time are necessary input values.

3.3.1 CREW METABOLIC RATE

3.3.1.1 GENERAL METABOLIC RATES

The metabolic load affects air revitalization, food use, and heat production directly and, to a lesser extent, also affects water use, waste production, and other functions. Lane, *et al.* (1996) lists metabolic energy requirements as shown in Table 3.3.2. The average metabolic rate assumed for a 70 kg crewmember is 11.82 MJ/CM-d (136.8 W/CM), per NASA (1991) [54]. Here, crewtime is expressed in "crewmember-hours" (CM-h) or "crewmember-days" (CM-d) where the prefix "crewmember" (CM) identifies a single individual conducting a task for the appended duration. Actual metabolic rate varies with lean body mass, environment, and level of physical activity. However, because lean body mass data is difficult to collect, a combination of total body mass and gender are often substituted for this parameter. Embedded in this substitution is the generalization that males have a greater percentage of lean tissue than females for the same total body mass. Thus, MSIS (1995) defines the crewmember mass range from a 95th percentile American male, with a total body mass of 98.5 kg, to a 5th percentile Japanese female, with a total mass of 41.0 kg. (See Table 3.3.1.) Metabolism increases due to physical exertion, and a heavy workload can generate more than 800 W/CM of thermal loading. Few people can continue this level of exertion for long, though the total energy expenditure for an exceptionally active 70 kg male could be as high as 18 MJ/CM-d (208.3 W/CM) of thermal loading on the crew cabin or extravehicular mobility unit. (Metabolic data from Muller and Tobin, 1980.) Thus, EVA, as noted in Section 5.1, and exercise protocols can elevate metabolic rate. This data does not account for any metabolic effects due to low gravity. Data given in following sections are scaled for low and high levels of activity and for small and large people. The values derived using Table 3.3.2 account for a moderate level of activity.

Table 3.3.1 Crewmember Mass Limits

		Limits			
	Units	**lower**	**nominal**	**upper**	**Reference**
Crewmember Mass	kg	41.0	70.0	98.5	From MSIS (1995).

Table 3.3.2 Human Metabolic Rates

Gender	Age [y]	Metabolic Rate [55] [kJ/CM-d]	Reference
Male	18 – 30	1.7 (64.02•*m* + 2,841)	Converted from Lane, *et al.* (1996).
	30 – 60	1.7 (48.53•*m* + 3,678)	
Female	18 – 30	1.6 (61.50•*m* + 2,075)	
	30 – 60	1.6 (36.40•*m* + 3,469)	

[54] The National Aeronautics and Space Administration has used these design values since at least the Space Station Freedom program.

[55] The metabolic rate is the product of a basal rate and an activity factor. The basal rate, in parentheses, depends on crewmember mass [kg], *m*, and a second, mass-independent coefficient. The activity factor here is correlated as a function of gender while the other coefficients are correlated as functions of both gender and age.

3.3.1.2 EXPLORATION METABOLIC LOADS

Table 3.3.3 provides a listing, in SI units, of the design metabolic outputs per crewmember for exploration missions; Table 3.3.4 provides comparable information in English units. The values here represent crew induced loads from a single crewmember. In addition to hardware induced thermal loads, a human vehicle must accommodate crew induced loads. For this assessment during vehicle design, assume only one crewmember will exercise at a time and other crewmembers remain at the nominal awake activity level. Total thermal loading from a single crewmember is the sum of the sensible, or dry, heat load plus total latent, or wet, heat load. The sensible heat load component includes direct radiant thermal emission and heat convection from a crewmember, which the total latent heat load includes moisture carried by exhaled gases, evaporated sweat from the skin or worn clothing, and sweat run-off, including the heat associated with any sweat which breaks free from the body as a liquid. For purposes of vehicle design modeling, oxygen consumption and carbon dioxide production are assumed to be maximal during exercise, and they are assumed to return to nominal awake values as soon as the crewmember ceases exercising.

The metabolic outputs and requirements listed in Table 3.3.3 and Table 3.3.4 were computed using the 41-Nodeman algorithm assuming the following inputs: the cabin air temperature is 70 °F (294.3 K), the cabin dew point is 50 °F (283.2 K), the air velocity is 30 ft/min (0.152 m/s), the overall cabin pressure is 10.2 psia (70.3 kPa), the crewmember's gender is male with a mass of 82 kg, the assumed maximal rate of oxygen uptake by the whole-body during exercise ($VO_{2\,max}$) is 45 mL/kg●min., the efficiency for the exercise device is 5 %, and the respiratory quotient is 0.92. Each crewmember's exercise routine is assumed to be 30 minutes long followed by 60 minutes to revert to the nominal awake metabolic level in a weightless environment. The crewmember's assumed clothing is a T-shirt and shorts. See Tucker (2006) for details.

Table 3.3.3 and Table 3.3.4 include oxygen consumption and carbon dioxide production values for each of the listed metabolic output values. From the exercise physiology computations, these values are given in terms of volumetric flowrates at standard conditions defined as a pressure of 1.0 atmosphere (101.3 kPa), a temperature of 0 °C (273.2 K), and no moisture in the air. The oxygen consumption and carbon dioxide production values in Table 3.3.3 and Table 3.3.4 are converted from volumetric flowrates at standard temperature and pressure to mass flowrates using the ideal gas law.

Assuming the profiles and values listed in Table 3.3.3 and Table 3.3.4, daily values may be determined. For these values and daily timeline, the daily sensible metabolic heat production is 10.02 MJ/CM-d (9,498 Btu/CM-d), the daily total latent metabolic heat production is 3.86 MJ/CM-d (3,659 Btu/CM-d), the daily water production is 1.598 kg/CM-d (3.5232 lb_m/CM-d), the daily oxygen consumption is 0.8806 kg/CM-d (1.9414 lb_m/CM-d), and the daily carbon dioxide production is 1.1063 kg/CM-d (2.4389 lb_m/CM-d).

Table 3.3.3 Crew Induced Metabolic Loads – SI Units

Activity		Duration [CM-h /CM-d]	Sensible Metabolic Heat Production [MJ/CM-h]	Total Latent Metabolic Heat Production [56] [MJ/CM-h]	Water Production [kg/CM-h]	Oxygen Consumption [kg/CM-h]	Carbon Dioxide Production [kg/CM-h]
Sleep		8.0	0.369	0.084 [57]	0.0348	0.0223	0.0283
Nominal Awake		14.5	0.434	0.120 [57]	0.0498	0.0377	0.0471
Exercise	After 15 minutes @ 75% of $VO_{2\ max}$	0.25	0.514	0.692	0.286	0.2364	0.2992
	After 30 minutes @ 75% of $VO_{2\ max}$	0.25	0.624	2.351	0.971	0.2364	0.2992
Post Exercise	After 15 minutes following 75% of $VO_{2\ max}$	0.25	0.568	1.437	0.594	0.0377	0.0471
	After 30 minutes following 75% of $VO_{2\ max}$	0.25	0.488	0.590	0.244	0.0377	0.0471
	After 45 minutes following 75% of $VO_{2\ max}$	0.25	0.466	0.399	0.164	0.0377	0.0471
	After 60 minutes following 75% of $VO_{2\ max}$	0.25	0.455	0.296	0.131	0.0377	0.0471

Table 3.3.4 Crew Induced Metabolic Loads – English Units

Activity		Duration [CM-h /CM-d]	Sensible Metabolic Heat Production [Btu/CM-h]	Total Latent Metabolic Heat Production [56] [Btu/CM-h]	Water Production [lb_m/CM-h]	Oxygen Consumption [lb_m/CM-h]	Carbon Dioxide Production [lb_m/CM-h]
Sleep		8.0	350	80 [57]	0.0767	0.0491	0.0623
Nominal Awake		14.5	411	114 [57]	0.1098	0.0831	0.1039
Exercise	After 15 minutes @ 75% of $VO_{2\ max}$	0.25	487	656	0.6310	0.5212	0.6597
	After 30 minutes @ 75% of $VO_{2\ max}$	0.25	591	2,228	2.1416	0.5212	0.6597
Post Exercise	After 15 minutes following 75% of $VO_{2\ max}$	0.25	538	1,362	1.3096	0.0831	0.1039
	After 30 minutes following 75% of $VO_{2\ max}$	0.25	463	559	0.5370	0.0831	0.1039
	After 45 minutes following 75% of $VO_{2\ max}$	0.25	442	378	0.3624	0.0831	0.1039
	After 60 minutes following 75% of $VO_{2\ max}$	0.25	431	281	0.2884	0.0831	0.1039

56 The value includes, where applicable, both latent heat production and a sweat run-off component.
57 This value does not include a sweat run-off component because none is nominally expected for this activity level.

3.3.2 CREWTIME ESTIMATES

Crewtime is an important commodity on any human mission. In fact, wise usage of the crew's time is at the core of all exploration in which human beings take part. Historically, crewtime for life support functions has been limited to monitoring equipment and infrequently replacing expendables. Support for the biomass production within a Food Subsystem, however, could easily consume a substantial fraction of the crew's time if designed with inadequate automation.

The information here is meant to outline the time available to a crewmember during a standard workweek. Langston (2005) outlines a generic schedule for crewtime on ISS. This is assumed with slight modifications here as shown below in Table 3.3.5.

Table 3.3.5 Time Allocation for a Nominal Crew Schedule in a Weightless Environment [58]

Activity	Weekday [CM-h /CM-d]	Weekend Day [CM-h/CM-d]	
Daily Planning Conferences	0.5	0.0	Variably-Scheduled Time
Daily Plan Review / Report Preparation	1.0	0.0	
Work Preparation	0.5	0.0	
Scheduled Assembly, Systems, and Utilization Operations [59]	6.5	0.3	
Meals [60]	3.0	3.0	
Housekeeping, including Laundry	0.0	2.0	
Post Sleep	0.5	0.5	Invariantly-Scheduled Time
Exercise, Hygiene, Setup / Stow	2.5	2.5	
Recreation	0.0	6.0	
Pre-Sleep	1.0	1.0	
Sleep	8.5	8.5	
Total	**24.00**	**24.00**	

Several of the categories in Table 3.3.5 deserve some additional explanation. The category "scheduled assembly, systems, and utilization operations" includes, among other things, system and vehicle maintenance. Thus, life support system maintenance deducts crewtime from other mission objectives. The category "meals" includes pre-meal preparation and post-meal clean up in addition to actual meal consumption. It is assumed here that the time for meals would not diminish on a vacation day. "Housekeeping, including laundry" is assumed here to include laundry operations, if applicable, in addition to general vehicle cleaning operations. For ISS this is scheduled as four hours per crewmember per week during the weekend, or two hours per crewmember per weekend-day. "Exercise, hygiene, setup / stow" is assumed to include pre- and post-exercise operations, such as post-exercise hygiene operations. In short, exercise includes some overhead in addition to the actual time spent exercising. "Sleep" denotes time for rest.

The ISS schedule devotes up to 80 minutes total of "daily payload operations" per non-weekday to support experiments that demand tending daily (Langston, 2005). This is included above in "scheduled

---

58 From Langston (2005) for International Space Station crews. Note: Time estimates are given for a nominal week inside of ISS excluding variations for critical mission functions such as docking/undocking operations and/or extravehicular activities.

59 This category includes payload operations. Langston (2005) allots up to 80 minutes per day to support experiments that may require daily tending, although such usage of crewtime is discouraged. Here, in round terms, this is represented as 0.3 hours per day per crewmember assuming the total time for daily payload operations will not increase and rounding to the nearest 0.1 hour.

60 Langston (2005) allots a uniform 1.0 hour per meal for preparation, consumption, and clean-up.

assembly, systems, and utilization operations" during both weekdays and weekend days. [61] Assuming the overall magnitude of these daily payload operations will not increase, a crew of four, and rounding to the nearest 0.1 h, then these operations equate to 0.3 h/CM-d.

Here, the last five categories in Table 3.3.5, post sleep, exercise, hygiene, setup / stow, recreation, pre-sleep, and sleep, are not available for life support operations under nominal scheduling scenarios. For purposes here, they are classified as Invariantly-Scheduled Time (IST).

Time other than IST, theoretically, might be available for either maintaining the life support system or for other activities if the life support system uses less time. This time block is designated here as Variably-Scheduled Time (VST). VST includes not only time for mission objectives, but also time scheduled for life support operations, such as equipment maintenance, meal preparation, consumption, and clean-up, and laundry operations. Realistically, using the entire block of VST for life support functions is unacceptable, though the total VST places an upper limit on available time. Further, any time not used for life support operations may be employed to accomplish mission objectives while not impacting the IST.

As outlined in Langston (2005), ISS will operate on a standard week of seven 24-hour days. The standard workweek, for planning purposes, is five weekdays followed by a two-day weekend. Vacation is allotted as eight days per crewmember per year regardless of nationality.

Assuming a workweek schedule as outlined in Table 3.3.5 and an ISS vacation schedule, a crewmember will have, on average, 67.2 CM-h/wk of VST and 100.8 CM-h/wk of IST in a weightless environment. [62] Assuming the exercise time is 0.5 CM-h/d shorter due to working against gravity, a crewmember will have 69.7 CM-h/wk of VST and 98.3 CM-h/wk of IST on a planetary surface. Minimally, a crewmember might be expected to work at least 50 CM-h/wk, recalling that this VST includes maintaining the life support equipment and meal operations. The maximum available VST might be 10% greater than the average values but, based on Skylab experience, this rate can only be maintained for periods of 28 days or less.

Table 3.3.6 Crewtime per Crewmember per Week

	Assumptions [CM-h/wk]		
Mission Phase	**lower**	**nominal**	**upper** [63]
Transit/Weightlessness	50 (1)	67.2 (2)	73.9 (1)
Surface/Hypogravity	50 (1)	69.7 (1)	76.7 (1)

References

(1) Estimated (see above)
(2) Based on Langston (2005)

To assess the cost associated with adding an operation that requires crew intervention, a crewtime mass penalty is computed by dividing the total per capita life support system mass by the VST crewtime. This penalty may be applied to determine the ESM associated with crew operations. Typical values might vary between 0.1 kg/CM-h and 10 kg/CM-h.

Two philosophies are commonly employed by researchers to determine a crewtime-mass-penalty (CTMP). The first assumes that each hour of crewtime required by the life support systems is equally

---

61 During the weekday the daily payload operations are included within the allotment of 6.5 h/CM-d. They only appear as a "separate item" on weekend days.

62 The term "microgravity" is often used to designate the condition experienced in Earth orbit. However, until one is relatively far away from the Earth, gravity is still present, and an older term, "weightlessness," is more accurate. In low-Earth orbit, the force of gravity is still about 95% of what it is on the surface of the Earth, but objects falling freely – whether in orbit or falling towards the atmosphere or in any other trajectory not involving non-gravitational external forces, such as propulsion or atmospheric drag – do not feel any force. "Weight" is the term used for the force felt when a human's feet press against the Earth, and thus holds the individual back against the force of gravity. In free fall, there is no such force, hence the term "weightless" is more accurate. To get true microgravity – a millionth of that on the surface of the Earth – the Sun's gravity must be considered also. At the distance of the Moon, this is about twice that of the Earth. To encounter true microgravity, one would have to travel out to near the edge of the Solar System, about as far as the orbit of Uranus. In many situations, the difference between microgravity and weightlessness does not matter. However, it may affect the behavior of fluids, rotational movement, and large structures, and the use of tethers.

63 The listed upper limit for crewtime per week is 10% above the average values discussed in the text. Firm upper limits are not currently known, but they are likely to be no greater than these values, especially for operations lasting more than a week or two.

valuable. The second, as forwarded by Levri, *et al.* (2000), assumes that each additional hour of time required by the life support system is more valuable than the previous hour. The first approach is consistent with the philosophy adopted to compute the other mass-equivalencies (See Section 3.2), while the second tends to more severely penalize a life support system architecture that makes large demands on crewtime. The first approach is recommended for general use.

The first approach used to determine CTMP assumes each hour of crewtime is equally valuable. Once a value for crewtime is established, changes in crewtime have a linear effect on the overall equivalent mass of a life support system. Table 3.3.7 provides CTMP values for several mission scenarios computed using Equation 3.3-3. Inputs for these values come from or are based on the Advanced Life Support Research and Technology Development Metric for Fiscal Year 2005 (Metric, 2005). The lower and nominal values in Table 3.3.7 are derived from life support systems using advanced technologies, while the upper values reflect current technologies from historical programs such as the Space Transportation System, or Shuttle, or the International Space Station. [64]

Table 3.3.7 Crewtime-Mass Penalty Values Based Upon the Fiscal Year 2005 Advanced Life Support Research and Technology Development Metric

Mission Destination	Assumptions [kg/CM-h] lower	nominal	upper	Reference
Low Earth Orbit				Metric (2005)
International Space Station, Assembly Complete for United States On-orbit Segment	0.333	0.333	0.724	
Luna				
Crew Exploration Vehicle	6.09	6.09	7.42	
Lunar Surface Access Module	9.84	9.84	10.66	
Lunar Outpost [65]	1.50	1.50	2.14	
Mars				
Mars Transit Vehicle	0.565	0.565	0.728	
Mars Descent / Ascent Lander	2.03	2.03	3.71	
Surface Habitat Lander	0.465	0.465	0.957	

The second approach to determine CTMP values assumes that each hour of crewtime required by the life support system is more valuable than the previous hour. Thus, the CTMP is computed by dividing the life support system mass, excluding crewtime, by the total available crewtime that is not devoted to personal activities or to maintaining the life support system. Equivalently, this latter denominator is VST minus time devoted to the life support system. This value is effectively fixed once the total crewtime, crewtime devoted to the life support system, and the life support system mass are determined. However, this value is a function of the crewtime required to service and maintain the life support system, so it will vary if its component values change.

Assuming each hour of crewtime is more valuable than the previous hours of crewtime, Levri, *et al.* (2000) present a formulation for the second crewtime-value formulation. They define the following terms:

64 Please note that the Advanced Life Support Research and Technology Development Metric for Fiscal Year 2005 may not be identical to the infrastructure values presented above in Section 3.2; the infrastructure values should, however, be comparable, so the values here may be used as approximate values.

65 Metric (2005) calls the "Lunar Outpost" the "Destination Surface System."

Symbol	Units	Physical Meaning
$ESM_{w/o\ ch}$	[kg]	Equivalent system mass (ESM) for the life support system without accounting for crewtime spent for life support. Or, the "non-crewtime" portion of ESM.
ESM_{LSS}	[kg]	Component of life support ESM to support crewtime involved in life support. Or, the "crewtime" portion of ESM.
ESM_{Total}	[kg]	Total life support system ESM; $ESM_{w/o\ ch} + ESM_{LSS}$.
t_{LSS}	[CM-h/wk]	Crewtime spent on the life support system. This is identical to the portion of VST spent of life support.
t_{MP}	[CM-h/wk]	The total crewtime per week available for life support system maintenance or mission-related objectives. This is equivalent to VST.
t_{MP-LSS}	[CM-h/wk]	Crewtime per week not devoted to the life support system or to personal activities; $t_{MP} - t_{LSS}$. This is crewtime available for mission-related objectives such as science or exploration.

Levri, *et al.* (2000) then assume that the overall ESM of the life support system, including the crewtime, is proportional to the total mission production time as the ESM of the life support system without crewtime is proportional to mission production time less the time for life support, or:

$$\frac{ESM_{Total}}{t_{MP}} = \frac{ESM_{w/o\ ch}}{t_{MP-LSS}} \qquad \text{Equation 3.3-1}$$

Alternatively, the overall ESM of the life support system is:

$$ESM_{Total} = ESM_{w/o\ ch}\left(\frac{t_{MP}}{t_{MP-LSS}}\right) \qquad \text{Equation 3.3-2}$$

Using this approach, as crewtime for life support increases, the crewtime per week not devoted to life support or to personal activities, t_{MP-LSS}, decreases, and the overall ESM for the life support system increases in a non-linear manner. In fact, as t_{MP-LSS} approaches zero, the overall ESM for the life support system approaches infinity.

Thus, here CTMP is derived by dividing the life support equivalent system mass excluding crewtime by the total available crewtime not devoted to personal activities or life support maintenance.

$$CTMP = \frac{ESM_{w/o\ ch}}{t_{MP}} \qquad \text{Equation 3.3-3}$$

3.3.3 NOMINAL HUMAN INTERFACES

Nominal balances of major life support commodities are summarized in Table 3.3.8 for a standard 70 kg crewmember with a respiratory quotient [66] of 0.869 during intravehicular activities. The water loads include 0.345 kg/CM-d of metabolically generated water. Actual values depend on many factors, including physical workload, diet, and individual metabolism.

[66] Respiratory quotient is defined as moles of carbon dioxide produced divided by moles of oxygen consumed.

Table 3.3.8 Summary of Nominal Human Metabolic Interface Values

Balance [67]	Interface Basis	Units	Nominal Value
	Overall Body Mass	kg	70.0
	Respiratory Quotient		0.869
	Air		
– *m*	Carbon Dioxide Load	kg/CM-d	0.998
+ *m*	Oxygen Consumed	kg/CM-d	0.835
	Food		
+ *m*	Food Consumed; Mass [68]	kg/CM-d	0.617 [69]
+ *E*	Food Consumed; Energy Content	MJ/CM-d	11.82
+ *m*	Potable Water Consumed [70]	kg/CM-d	3.909 (1)
	Thermal		
– *E*	Total Metabolic Heat Load [71]	MJ/CM-d	11.82
	Sensible Metabolic Heat Load	MJ/CM-d	6.31
	Latent Metabolic Heat Load [72]	MJ/CM-d	5.51
	Waste		
– *m*	Fecal Solid Waste (dry basis)	kg/CM-d	0.032
– *m*	Perspiration Solid Waste (dry basis)	kg/CM-d	0.018
– *m*	Urine Solid Waste (dry basis)	kg/CM-d	0.059
	Water [73]		
– *m*	Fecal Water	kg/CM-d	0.091
– *m*	Respiration and Perspiration Water [74]	kg/CM-d	2.277
– *m*	Urine Water	kg/CM-d	1.886 (1)

References
Converted from NASA (1991) unless noted otherwise.
(1) From NASA (1991) and Perchonok (2001)

In addition to the gross metabolic balance, human beings also emit other compounds in trace concentrations, products of metabolic processes, as noted below in the appropriate sections. Additionally, human beings also generate solid and water loads associated with personal hygiene. These hygiene loads are more variable than metabolic loads and, thus, tend to be mission dependent. Nominal hygiene loads are also summarized below. Please refer to the tables listing design water and waste loads.

67 Masses consumed by the crewmember are denoted by "+ *m*," while masses rejected by the crewmember are denoted by "- *m*." Likewise, energy entering the crewmember is denoted by "+ *E*," while energy rejected by the crewmember is denoted by "- *E*."

68 This assumes a completely dehydrated or dry basis.

69 Dry mass with no water content. Bourland (1998) gives a value of 0.674 kg/CM-d. See Table 5.2.1.

70 This value includes drink water and moisture contained within consumed food. Food is not generally dehydrated.

71 The total metabolic heat load is the summation of the sensible and latent metabolic heat loads.

72 Assuming a latent heat for water of 2,420 kJ/kg.

73 The difference between the water load sum of fecal water, respiration and perspiration water, and urine water, and the potable water consumed, as given above, is metabolic water. Here, metabolic water is 0.345 kg/CM-d. Also, the water values below are consistent with the dry basis waste values above.

74 The respiration and perspiration water corresponds to the latent metabolic heat load above.

4 LIFE SUPPORT SUBSYSTEM ASSUMPTIONS AND VALUES

4.1 AIR SUBSYSTEM

4.1.1 DESIGN VALUES FOR ATMOSPHERIC SYSTEMS

Air regeneration is one of the more time-critical life support functions. Typical control (steady-state) values are given in Table 4.1.1. Total pressure is an issue. Some generally prefer to use normal sea-level pressure, because that is the condition under which most known data was collected, and because people can live satisfactorily for a long duration under these conditions. Others, however, prefer lower pressures, to reduce the mass of required gas, the mass of the vehicle, and the requirement to pre-breathe with current extravehicular mobility units or "spacesuits." Reduced pressure normally entails increasing the percentage of oxygen, relative to other gases in the cabin atmosphere, which increases the risk of fire. Here a nominal cabin pressure of 70.3 kPa is assumed based on Lin (1997).

The tolerable partial pressure of carbon dioxide, $p[CO_2]$, for humans, is higher than what is accepted as desirable for most plants. The generally accepted optimum for plants is 0.120 kPa (1,200 ppm), but the practical upper limit on carbon dioxide for plant chambers is currently unknown. Separate atmospheric concentrations could be used for crew compartments and plant chambers by regulating inter-chamber gas transfer rates. Earth normal $p[CO_2]$ is 0.035 kPa to 0.040 kPa (350 to 400 ppm).

Table 4.1.1 Typical Steady-State Values for Vehicle Atmospheres

		Assumptions [75]			
Parameter	**Units**	**lower**	**nominal**	**upper**	**References**
Carbon Dioxide Generated	kg/CM-d	0.466 (1)	0.998 (2)	2.241 (1)	(1) calculated based upon lower and upper metabolic rates.
Oxygen Consumed	kg/CM-d	0.385 (1)	0.835 (2)	1.852 (1)	(2) NASA (1991)
$p[CO_2]$ for Crew [76]	kPa	0.031 (6)	0.4 (3)	0.71 (6)	(3) Lin (1997)
$p[CO_2]$ for Plants [76]	kPa	0.04 (4)	0.12 (5)	TBD	(4) Earth normal
$p[O_2]$ for Crew	kPa	18.0 (6)	18.0 - 23.1 (6)	23.1 (6)	(5) accepted optimum for plant growth
Total Cabin Pressure	kPa	48.0 (6) [77]	70.3 (3)	102.7 (6)	(6) ALS RD (2003)
Temperature	K	291.5 (6)	295.2 (6)	299.8 (6)	(7) Boeing (2002)
Relative Humidity	%	25 (6)	60 (6)	70 (6)	(8) computed from NASA (1998) and Boeing (1994)
Perspired Water Vapor	kg/CM-d	0.036 (7)	0.699 (7)	1.973 (7)	(9) Eckart (1996)
Respired Water Vapor	kg/CM-d	0.803 (7)	0.885 (7)	0.975 (7)	
Leakage Rate (spaceflight)	%/d	0	0.05 (8)	0.14 (8)	
Leakage Rate (test bed)	%/d	1 (9)	5 (9)	10 (9)	

[75] The values here are averages for nominal operation of the life support system. Degraded or emergency life support system values may differ.

[76] While any contaminant removal technology must, by requirement, maintain that contaminant's concentration below a set value, the nominal concentration likely corresponds to that provided when the technology is operating most efficiently rather than to some specific value (Lange, 1999). Barring other constraints, technology efficiency dictates the nominal carbon dioxide concentration derived from any carbon dioxide removal equipment. However, the values here provide carbon dioxide concentrations for studies that do not explicitly determine such values independently.

[77] An almost pure oxygen atmosphere, such as was utilized for early spacecraft (Mercury, Gemini, and Apollo), has a total pressure of 34.5 kPa. Skylab used an atmosphere at 34.4 kPa (258 millimeters of mercury), but the crews reported numerous discomforting effects.

In addition to the carbon dioxide load noted above in Table 4.1.1, human beings also emit volatile compounds, products of metabolic processes, on a per crewmember per day basis, as noted in Table 4.1.2, while Table 4.1.3 details emissions from cabin equipment on a per mass of equipment per day basis (Perry, 1998). This model (Perry, 1998) lists trace contaminant emissions accounting for greater than 97 percent of the observed loading during past Shuttle and Spacelab missions, while Perry (1995) gives a complete listing of observed emissions for Shuttle and Spacelab. In addition to the emission rates, Table 4.1.2 and Table 4.1.3 list the compound's International Union of Pure and Applied Chemistry (IUPAC) name [78] in brackets, when it differs from the common name, and the molecular weight (MW). Current spacecraft maximum allowable concentration (SMAC) requirements for these compounds may be found in ALS RD (2003). These compounds are historically removed by the trace contaminant control technologies.

To estimate a loading rate for contaminant removal design, Perry (1998) recommends using the mean rate plus one standard deviation. For more conservative designs, the maximum design loading case should be no more than the mean rate plus 1.6 standard deviations.

Table 4.1.2 Model for Trace Contaminant Generation from Human Metabolism [79]

Component	MW	Mean Rate [mg/d-kg]	Standard Deviation [mg/d-kg]
ammonia	17.00	350.0	1.36
methane	16.04	234.0	94.7
hydrogen	2.02	31.3	19.0
carbon monoxide	28.01	13.8	3.74
acetone [2-propanone]	58.08	9.63	9.12
methyl ethyl ketone [2-butanone]	72.11	8.74	2.86
ethane	30.07	4.29	2.41
propane	44.09	3.29	2.10
ethyl alcohol [ethanol]	46.07	2.18	2.08
benzene	78.11	1.18	0.972
isopropyl alcohol [2-propanol]	60.09	1.02	0.671
isoprene [2-methyl-1,3-butadiene]	68.12	0.913	0.643
pentane	72.15	0.765	0.457
toluene [methylbenzene]	92.15	0.462	0.179
n-propyl alcohol [1-propanol]	60.09	0.408	0.168
methyl alcohol [methanol]	32.04	0.396	0.478
n-butyl alcohol [1-butanol]	74.12	0.395	0.122
ethyl acetate [ethanoic acid ethyl ester]	88.11	0.391	0.384
ethylbenzene	106.16	0.373	0.156
hexahydrophenol [cyclohexanol]	100.16	0.370	0.130
acetaldehyde [ethanal]	44.05	0.338	0.258
p-dioxane [1,4-dioxane]	88.11	0.317	0.142
carbolic acid [phenol]	94.11	0.258	0.060
formaldehyde [methanal]	30.03	0.167	0.264
methyl chloroform [1,1,1-trichloroethane]	133.41	0.161	0.249
propionaldehyde [propanal]	58.08	0.154	0.266
butyl acetate [ethanoic acid butyl ester]	116.16	0.132	0.0512
hexamethylene [cyclohexane]	84.16	0.121	0.0512
isobutyl acetate [ethanoic acid isobutyl ester]	116.16	0.0761	0.0301
methyl isobutyl ketone [4-methyl-2-pentanone]	100.16	0.0747	0.0251
methylene chloride [dichloromethane]	84.93	0.0647	0.0245
chlorophene [chlorobenzene]	112.56	0.0497	0.0208
isobutyl alcohol [2-methyl-1-propanol]	74.12	0.0477	0.0827
tetrachloroethylene [tetrachloroethane]	165.83	0.0472	0.0195
o-xylene [1,2-dimethylbenzene]	106.16	0.0323	0.0242
m-xylene [1,3-dimethylbenzene]	106.16	0.0323	0.0242
p-xylene [1,4-dimethylbenzene]	106.16	0.0323	0.0242
propylbenzene	120.20	0.0276	0.0107
propyl acetate [ethanoic acid propyl ester]	102.13	0.00146	0.00252
n-amyl alcohol [1-pentanol]	88.15	0.000866	0.00150

[78] The Commission on Nomenclature by The Council of the International Union of Pure and Applied Chemistry (IUPAC) at Paris, 1957, defined IUPAC nomenclature.

[79] From Perry (1998).

Table 4.1.3 Model for Trace Contaminant Generation from Cabin Equipment [80]

Component	MW	Mean Rate [mg/d-kg]	Standard Deviation [mg/d-kg]
Freon 113 [1,1,2-trichloro-1,2,2-trifluoroethane]	187.40	0.00864	0.0103
ethyl alcohol [ethanol]	46.07	0.00353	0.00432
methyl ethyl ketone [2-butanone]	72.11	0.00281	0.00320
isopropyl alcohol [2-propanol]	60.09	0.00251	0.00148
n-butyl alcohol [1-butanol]	74.12	0.00227	0.00244
acetone [2-propanone]	58.08	0.00223	0.00139
toluene [methylbenzene]	92.15	0.00153	0.000455
carbon monoxide	28.01	0.00137	0.000658
methylene chloride [dichloromethane]	84.93	0.00112	0.00103
methyl isobutyl ketone [4-methyl-2-pentanone]	100.16	0.000864	0.000546
methyl alcohol [methanol]	32.04	0.000855	0.000418
chlorophene [chlorobenzene]	112.56	0.000784	0.000760
Freon 11 [trichlorofluoromethane]	137.40	0.000771	0.000637
m-xylene [1,3-dimethylbenzene]	106.16	0.000703	0.00132
p-xylene [1,4-dimethylbenzene]	106.16	0.000668	0.000412
methane	16.04	0.000543	0.000096
cellosolve acetate [ethanoic acid 2-ethoxyethyl ester]	132.16	0.000461	0.000285
pimelic ketone [cyclohexanone]	98.14	0.000434	0.000228
isobutyl alcohol [2-methyl-1-propanol]	74.12	0.000414	0.000433
methyl chloroform [1,1,1-trichloromethane]	133.41	0.000414	0.000258
butyl acetate [ethanoic acid butyl ester]	116.16	0.000398	0.000348
tetrachloroethylene [tetrachloroethane]	165.83	0.000380	0.000348
n-butylaldehyde [butanal]	72.10	0.000311	0.000548
o-xylene [1,2-dimethylbenzene]	106.16	0.000307	0.000249
ethyl cellosolve [2-ethoxyethanol]	90.12	0.000281	0.000383
hexahydrophenol [cyclohexanol]	100.16	0.000267	0.000489
octamethylcyclotetraoxosilane	296.62	0.000184	0.000086
propionaldehyde [propanal]	58.08	0.000162	0.000157
carbolic acid [phenol]	94.11	0.000159	0.000324
ethyl acetate [ethanoic acid ethyl ester]	88.11	0.000158	0.000138
hexamethylene [cyclohexane]	84.16	0.000148	0.000231
adipic ketone [cyclopentanone]	84.11	0.000148	0.000322
propyl acetate [ethanoic acid propyl ester]	102.13	0.000118	0.000220
mesityl oxide [4-methyl-3-penten-2-one]	98.14	0.000116	0.000075
hexamethylcyclotrioxosilane	222.40	0.000115	4.65×10^{-5}
n-propyl alcohol [1-propanol]	60.09	0.000111	0.000130
propylbenzene	120.20	9.61×10^{-5}	0.000119
ethylbenzene	106.16	8.38×10^{-5}	6.60×10^{-5}
Halon 1301 [bromotrifluoromethane]	148.90	8.06×10^{-5}	0.000180
trimethylsilanol	90.21	7.89×10^{-5}	8.98×10^{-5}
n-amyl alcohol [1-pentanol]	88.15	7.20×10^{-5}	9.00×10^{-5}
acetaldehyde [ethanal]	44.05	6.86×10^{-5}	3.99×10^{-5}
methyl methacrylate [2-methyl propenoic acid methyl ester]	100.12	6.78×10^{-5}	6.19×10^{-5}
methyl acetate [ethanoic acid methyl ester]	74.08	6.18×10^{-5}	7.91×10^{-5}
isobutyl acetate [ethanoic acid isobutyl ester]	116.16	5.85×10^{-5}	9.32×10^{-5}
p-dioxane [1,4-dioxane]	88.11	5.76×10^{-5}	5.60×10^{-5}
pentane	72.15	4.46×10^{-5}	5.08×10^{-5}
tert-butyl alcohol [2-methyl-2-propanol]	74.12	4.36×10^{-5}	3.02×10^{-5}
ethylene dichloride [1,2-dichloroethane]	98.97	4.24×10^{-5}	3.50×10^{-5}
ammonia	17.00	4.11×10^{-5}	4.35×10^{-5}
decamethylcyclopentaoxosilane	370.64	2.30×10^{-5}	2.66×10^{-5}
benzene	78.11	1.51×10^{-5}	1.00×10^{-5}
Freon 12 [dichlorodifluoromethane]	120.91	6.25×10^{-6}	7.21×10^{-6}
hydrogen	2.02	2.41×10^{-6}	3.50×10^{-6}
propane	44.09	4.27×10^{-7}	4.94×10^{-7}
ethane	30.07	4.07×10^{-7}	7.60×10^{-7}
formaldehyde [methanal]	30.03	1.74×10^{-8}	2.67×10^{-8}

[80] From Perry (1998).

4.1.2 GAS STORAGE

Gas storage is necessary for any life support system. Gas can be stored in pressure vessels, as a cryogenic fluid, adsorbed, or chemically combined. The costs of storage depends on the gas, with the "permanent" gases, such as nitrogen and oxygen, requiring higher pressure and remain in the gaseous state at normal temperatures, while the "non-permanent" gases, such as carbon dioxide, can be stored as liquids under pressure. Cryogenic storage requires either continuous thermal control or use of a small quantity of the gas to provide cooling by evaporation. Adsorption and chemical combination are very gas-specific, and vary in performance. See Table 4.1.4 for known gas storage tankage masses.

Table 4.1.4 Gas Storage

	Performance [kg of tankage/kg of gas]	
Type of Storage	**Nitrogen**	**Oxygen**
Pressure Vessel	0.556 – 1.70 (1)	0.364 (2)
Cryogenic Storage	0.524 (2)	0.429 (2)

References

(1) Lafuse (2001)
(2) From Ham. Stand. (1970)

4.2 HABITATION SUBSYSTEM

4.2.1 CLOTHING

Clothes have not traditionally been part of an environmental control and life support system. However, the data here detail some of the many interfaces between crew clothing, overall crew support mass, and the Water and Waste Subsystems. Further, Habitation is currently part of the ELS Project. The approach for ISS is to resupply clothes as needed. Alternately, clothes could be cleaned and reused to significantly reduce the mass of clothes allotted per mission.

The main interfaces between other life support subsystems and a traditional laundry would be the mass of water to support an aqueous washer and the corresponding water vapor load. The water vapor load would depend on the performance of the laundry system, but assuming that most of the wash water is removed mechanically, leaving a mass of water within the fabric equal to the mass of the clothes, the corresponding water-vapor load would be about 1.5 kg/CM-d.

Table 4.2.1 provides a summary of clothing and laundry options. Table 4.2.2 provides values for an aqueous laundry system originally under development for ISS (Lunsford and Grounds, 1993, and ALS Systems Workshop, 1998), while Table 4.2.3 details a recent study of a more efficient washer/dryer prototype unit (Jeng and Ewert, 2002). In this latter study, the authors assumed clothing would have a useful life of 40 laundry cycles.

Table 4.2.1 Clothing and Laundry Options

	Mass [kg]	Mass [kg/CM-d]	Volume [m^3/CM-d]	Power [kW]
ISS Approach (clothes shipped, single use):				
From Chaput (2003)		0.343 (1) [81]		
From JCPC (1999)		0.718 (2)	0.0013 (2)	
From Branch (1998)		1.69 (3)	0.00135 (3)	
From Reimers and McDonald (1992)		1.47 (4)	0.00140 (4)	
Using a Laundry:				
Clothes		0.267 (4)	0.000351 (4)	
		0.0746 (6a)	0.00044 (6a)	
		0.0373 (6b)	0.00022 (6b)	
		0.0191 (6c)	0.00011 (6c)	
Laundry Equipment	118 (4)			0.31 (4)
	80 (6)			0.751 (6)
Interfaces (Water)		12.47 (5) [82]		
		7.33 (6)		

References

(1) Chaput (2003). Based on clothing allocation "as planned" for ISS
(2) JCPC (1999). Based on clothing "as planned" for ISS.
(3) Branch (1998)
(4) Reimers and McDonald (1992)
(5) NASA (1990)
(6) Jeng and Ewert (2002)
(6a) Jeng and Ewert (2002); 90 d mission duration
(6b) Jeng and Ewert (2002); 180 d mission duration
(6c) Jeng and Ewert (2002); 600 d mission duration

Table 4.2.2 Early ISS Laundry Equipment Specifications

Washer Unit	Value	Units	Comments
Mass	118	kg	
Volume	0.66	m^3	
Capacity	2.7	kg/load	
Water Usage	49	kg/load	Effluent is greywater. This unit does not release water vapor.
Crewtime	0.33	CM-h/load	Load, remove, fold, and stow clothes.
Energy	3.3	kWh/load	
Consumables	0.0024	kg/load	Detergent

References

From Lunsford and Grounds (1993) with updates from material presented at the ALS Systems Workshop (1998). This information is based on the laundry originally under development for ISS.

[81] Chaput (2003) gives ISS planning values for clothing of 10.3 kg per crewmember per 30 days.
[82] The laundry uses clean water and provides a waste stream of greywater to the water recovery system.

Table 4.2.3 Advanced Washer/Dryer Specifications

Washer Unit	Value	Units	Comments	Reference
Mass	80	kg		From Jeng and Ewert (2002)
Volume	0.264	m^3		
Capacity	4.5	kg/load	Clothes	
Water Usage	51.3 [83]	kg/load	Effluent is greywater. This unit does not release water vapor.	
Crewtime	0.42	CM-h/load	Load, remove, fold, and stow clothes.	
Energy	0.95 [84]	kWh/load	Low setting	
Consumables	0.010	kg/load	Detergent (Igepon soap)	

4.3 WASTE SUBSYSTEM

The Waste Subsystem collects waste materials from life support subsystems and interfaces. Commonly wastes are perceived as materials that have no further utility. However, because ELS focuses on increased material loop closure, "wastes" encompass a variety of materials with varying degrees of possible future utility. Wastes might include crew metabolic wastes, food packaging, wasted food, paper, tape, soiled clothing, brines, inedible biomass, expended hygiene supplies, and equipment replacement parts from the other subsystems. The traditional definition of a waste within ELS and within this document excludes most gases, depending on the system configuration. For example, crew-expelled carbon dioxide might not be recycled within a given life support system architecture. In such a case, although carbon dioxide is technically a waste material, the Air Subsystem typically assumes the responsibility for waste gases. However, the Waste Subsystem might ultimately collect the expended carbon dioxide scrubbing materials and trapped gases if those gases are not vented. To further confuse subsystem definitions, a waste-processing device might incorporate trace contaminant control hardware, which is usually an Air Subsystem function, to control the release of potentially harmful gases. Further information related to waste types and characteristics are included below.

Wastes sent to the Waste Subsystem may be handled in many ways. Wastes accepted by the Waste Subsystem may be collected and stored, prepared for long-term storage, processed to recover resources, processed to render them safe for disposal, and/or disposed of, depending on the mission-specific requirements and constraints. The mission requirements and constraints consider cost, safety, planetary protection if applicable, integration with other subsystems, resource recovery, and any other pertinent issues defined for a specific vehicle.

Current NASA spacecraft waste-handling approaches essentially rely on dumping and storage. On Shuttle missions, most waste is stored and returned to Earth with little or no processing. Consequently, the volume of wastes can be significant. Waste processing on Shuttle includes drying fecal material by exposure to the vacuum of space. Waste from ISS is returned to Earth either via a controlled re-entry aboard the Shuttle, either in the orbiter mid-deck or within a multi-purpose logistics module in the payload bay, or aboard Progress cargo modules. If the wastes are removed from ISS using a Progress module, they are incinerated along with the vehicle during destructive re-entry. Wastewater, excess fuel cell product water, urine, and condensate are dumped, as necessary, from Shuttle according to the mission schedule.

In future long-duration missions, wastes may be disposed directly, or they may be processed. For example, during transit to Mars, jettisoning trash might be acceptable, though waste might be retained for radiation shielding or resource recovery. However, jettisoning waste on the Martian surface may be constrained by planetary protection protocols for exploration missions. Organic materials and microbial agents could threaten to biologically contaminate the Martian environment. Wastes may be processed to

[83] A washer using ozone, O_3, for the detergent will use less water. Energy usage, however, increases to support ozone production.

[84] Corresponding energy usage values: The washer cycle is 40 minutes at 300 W, and the dryer cycle is 60 minutes at 750 W.

recover useful resources, such as water, carbon dioxide, oxygen, and minerals (Pisharody, *et al.*, 2002). Wastes might also be processed in preparation for long-term storage or disposal, for example, microbial inactivation/elimination. Specific waste processing operations depend upon the mission scenario and the system-level costs versus the system-level benefits.

4.3.1 HISTORICAL DATA ON SKYLAB

The first NASA medium-duration missions were performed aboard Skylab. Prior to Skylab, the longest duration missions were Gemini 7, 14 days, and Apollo 17, 13 days. Within the Gemini and Apollo programs, wastes were either returned to Earth in the vehicle, or dumped, most notably on the Lunar surface. On Skylab, the Saturn S-IVB [85] oxygen tank was used as for waste disposal. The tank was vented to space through non-propulsive vents. Wastes were placed in the tank through an airlock and off-gassed to space. This eliminated the possibility of contamination of the crew areas through off-gassing and stored the wastes in a safe manner for an indefinite time. However, off-gassing may have contaminated the Skylab's exterior surfaces.

4.3.2 HISTORICAL WASTE LOADS FROM SPACE TRANSPORTATION SYSTEM MISSIONS

On Shuttle missions, waste is contained and stowed for return to Earth in either "dry" trash bags, or in the volume F "wet" trash. [86] Waste stream characterization and water content studies have been performed for each of six Shuttle missions: STS-29, STS-30, STS-35, STS-51D, STS-99, and STS-101. The waste analyses for STS-29 through STS-51D were conducted to improve solid waste management for the Shuttle program. The waste analyses for STS-99 and STS-101 provided data to develop a waste model to support the Waste Subsystem analysis within the ELS Project.

In 1985, wastes for STS-51D were analyzed at NASA Ames Research Center to determine the chemical composition of wastes and characterize the trash (Wydeven and Golub, 1991). This study found that for 49.2 kg of total waste, 27.8 kg was food-related trash. Approximately 22 %, or 10.8 kg, of the trash recovered was comprised of food-related plastic packaging materials. Another 12.2 kg of other plastics and paper brought the total for packaging materials within the trash to almost 47 %. This data is presented in Table 4.3.1 and summarized in Table 4.3.2. STS-51D supported seven crewmembers for seven days, [87] which is equivalent to 49 CM-d.

---

85 The Skylab space station was fabricated from a modified Saturn S-IVB rocket stage.

86 Shuttle stores trash generated within the vehicle itself in plastic bags or liners that are housed within designated storage areas on the middeck. Volume F is one such trash storage cabinet.

87 Officially, the mission duration for STS-51D is six days, 23 hours, 55 minutes, and 23 seconds. See http://www-pao.ksc.nasa.gov/kscpao/chron/sts51-d.htm

Table 4.3.1 Waste Analysis for STS-51D Trash

Trash Item	Mass [kg]	Moisture Content [%]	Fraction of Total Mass [%]	Reference
Food and Food Packaging				Wydeven and Golub (1991)
Plate Waste	4.8	70	9.8	
Plastic Food Containers	10.8	0.2	22.0	
Uneaten Food and Beverages [88]	12.2	0.2	24.7	
Biomedical	6.4		13.0	
Aluminum and Tape				
Grey Duct Tape	1.6		3.3	
Aluminum Cans	1.2	2	2.4	
Plastic and Paper				
Paper (mixed)	6.4	10.2	13.0	
Plastic Bags	3.2	0.2	6.5	
Miscellaneous Plastic	2.6	0.2	5.3	
Total	49.2		100.0	

Storage of wastes on-orbit during early Shuttle missions of 30 CM-d or less posed no challenge for the allotted resources of the Orbiter vehicle. However, as Shuttle missions lengthen for Extended Duration Orbiter of 112 CM-d or more, the volume allocated is inadequate for the safe stowage of trash. Research to determine future waste stowage requirements for Shuttle missions was initiated in 1989 by the Personal Hygiene and Housekeeping Laboratory at Johnson Space Center. The study objectives were to determine the mass and volume of waste generated per crewmember per day, and the amount of liquid stored in trash per crewmember per day (Grounds, 1990). Trash from Shuttle missions STS-29 (Garcia, 1989), STS-30 (Garcia, 1989), and STS-35 were analyzed. STS-35 differed from the two previous missions because STS-35 used pouches, and not boxes, for beverages and carried a prototype trash compactor (Grounds, 1990). Thus, there is a marked decrease in the volume of trash from STS-35 compared with the previous missions, probably in large part due to the change in drink packaging. This reduction in volume was consistent with data collected for STS-99 and STS-101 (Maxwell, 2000a and 2000b). The data from these missions is summarized in Table 4.3.2.

Not included in the trash data for Shuttle missions are dirty laundry or life support expendables, such as filters, that return to Earth separately from the trash. STS-101 generated ~50 kg of dirty laundry, consisting of clothing and towels, occupying ~0.5 m^3 (Maxwell, 2000b). Laundry returns to Earth in a mesh laundry bag. Storage, stabilization, and odor control for laundry, some of it wet, will require dedicated facilities on longer duration missions if no change is made to the current storage process. No data was available on life support system expendables for STS-101.

Table 4.3.2 summarizes waste stream analyses completed for STS-99 and STS-101, as well as historical data from STS-29, STS-30, and STS-51D.

[88] This value corresponds to food and drink food packages that were never opened.

Table 4.3.2 Space Transportation System Crew Provision Wastes from Past Missions

Mission	Duration [CM-d]	Trash (Solids) [kg /CM-d]	Trash (Solids) [m^3 /CM-d]	Water [kg /CM-d]	Water Percent of Total Trash (by mass) [%]
STS-29 (1)	25	1.49	0.0139	0.345	27.35
STS-30 (1)	20	1.63	0.0133	0.417	35.35
STS-35 (2)	63	1.14	0.0067	0.218	26.80
STS-51D (3)	49	1.01		0.096	9.61
STS-99 (4)	66	1.47	0.0029	0.290	19.75
STS-101 (5)	63	1.62	0.0041	0.439	27.09
Average	48	1.39	0.0082	0.301	24.33

References

(1) Garcia (1989)
(2) Grounds (1990)
(3) Wydeven and Golub (1991)
(4) Maxwell (2000a)
(5) Maxwell (2000b)

4.3.3 SOLID WASTE MANAGEMENT FOR THE INTERNATIONAL SPACE STATION MISSION

While limited containment and stowage planning is acceptable for Shuttle, ISS, with its 90-day resupply schedule, may benefit from more robust containment options, additional dedicated storage compartments, and resource recovery plans to reduce mission costs.

ISS solid waste management today is similar to that for *Mir*. Wastes are contained either in metal containers, for human wastes, or plastic bags, for crew provision and housekeeping wastes. Filled containers are returned to Earth either by Progress, which incinerates upon re-entry, or within Shuttle on the middeck or in a multi-purpose logistics module in the orbiter payload bay. Planned additions to the ISS waste processing hardware include only a urine processor scheduled for late in the assembly sequence.

Calculated overall waste generation rates, according to the life support subsystem and external interface categories, using data from ISS human missions through Expedition 3 are provided in Table 4.3.3, for reference missions associated with International Space Station, and Table 4.3.4, for reference missions associated with near-term exploration missions to Mars using the Mars Dual Lander Architecture. RMD (2001) details the assumed reference missions. Some data here is inferred, such as air filters. These tables present generation of storable or disposable wastes based on the assumed configurations. A common list of hardware is used for all vehicles. In cases where particular hardware is not part of the configuration for a specific reference mission, the location within the table is marked with an "×." When hardware is present, but a storable or disposable waste is not produced, a "☑"appears. When hardware is present and a storable or disposable waste is produced, a rate, in terms of mass per crewmember per day, is listed. These tables list only wastes delivered from the hardware or elements for disposal or storage listed, including any containers. Thus, wastes should not be counted more than once.

The technology suite for segments or vehicles in Table 4.3.3 and Table 4.3.4 are denoted by prefixes. Vehicles or segments with a prefix of "ISS" assume a hardware suite using primarily technologies listed in Carrasquillo, *et al.* (1997) for International Space Station. Vehicles or segments with a prefix of "ELS" use advanced and current technologies, as appropriate. Segments listed as Russian On-Orbit Segments of ISS use Russian ISS hardware and are provided as a reference. See RMD (2001) for details.

Possible types of waste are virtually unbounded, so Table 4.3.3 and Table 4.3.4 do not encompass all possible types of waste within a space mission. Further, the waste types are organized according to the subsystems and external interfaces defined in Section 2.4 and detailed in RMD (2001).[89] The configurations are not unique, nor are they necessarily complete. However, they provide a documented baseline.

[89] Although describing the same overall life support functionality, RMD (2001) uses a different organization than is assumed in Section 2.4.

Table 4.3.3 International Space Station Reference Mission Vehicle Wastes

	Assumptions [kg/CM-d]					
Component	**Russian On-Orbit Segment, Phase 2**	**Russian On-Orbit Segment, Phase 3**	**ISS United States On-Orbit Segment, Phase 3**	**ELS United States On-Orbit Segment, Post-Phase 2**	**ELS United States On-Orbit Segment, Phase 3**	**Notes**
Waste Subsystem Hardware						
Compactor	✗	✗	☑	☑	☑	Compactors reduce waste volume and waste storage containment mass
Commode	☑	☑	☑	☑	☑	
Dryer	✗	✗	✗	✗	☑	
Fecal Storage	0.50 (1)	0.50 (1)	0.50 (1)	0.50 (1)	0.13 (1)	This entry includes the Russian KTO (Russian solid waste container). Usage is based on mass of waste. Mass of waste depends on moisture content, which varies between options.
Lyophilization	✗	✗	✗	✗	✗	This technology yields a dry, stable solid waste and a separate greywater component.
Solid Waste Storage	☑	☑	☑	☑	☑	
Urinal	☑	☑	☑	☑	☑	
Urine Pretreatment	0.04 (2)	0.04 (2)	0.01 (2)	0.01 (2)	✗ (3)	This entry reflects chemical pretreatment, whether Russian or U.S. This is the mass of chemicals only.
Subtotal	**0.54**	**0.54**	**0.51**	**0.51**	**0.13**	

References: (1) Jones (2000); (2) Wieland (1998a and 1998b); (3) Flynn (2003); (4) Carrasquillo, et al. (1997); (5) This current document; (6) Lange (1998); (7) Lin (1998).

Table 4.3.3 International Space Station Reference Mission Vehicle Wastes (continued)

Component	Assumptions [kg/CM-d] Russian On-Orbit Segment, Phase 2	Russian On-Orbit Segment, Phase 3	ISS United States On-Orbit Segment, Phase 3	ELS United States On-Orbit Segment, Post-Phase 2	ELS United States On-Orbit Segment, Phase 3	Notes
Waste Subsystem Interfaces						
Air Subsystem	0.13 (4)	0.13 (4)	0.13 (4)	0.13 (4)	0.13 (4)	Based on ISS data at Assembly Complete. Reflects spares for the Air Subsystem.
EVA Support External Interface Wastes	0.02 (5)	0.02 (5)	0.02 (5)	0.02 (5)	0.02 (5)	The difference in values reflects variations in EVA workload.
Food External Interface Wastes						
Prepackaged Food Wastes	0.32 (5)	0.32 (5)	0.32 (5)	0.32 (5)	0.28 (5)	Assumption: Biomass production reduces prepackaged food mass slightly.
Inedible Biomass	✗	✗	✗	✗	✗	
Habitation Subsystem Wastes						
Expended Clothing	0.82 (5)	0.82 (5)	0.82 (5)	0.82 (5)	0.02 (5)	Clothing mass reduced by a factor of 40 with laundry. Assumption: 50% initial water content.
Hygiene Wipes	0.23 (5)	0.23 (5)	0.23 (5)	0.23 (5)	0.15 (5)	
Thermal External Interface Wastes	0.03 (4)	0.03 (4)	0.03 (4)	0.03 (4)	0.03 (4)	Based on ISS data for Assembly Complete.
Waste Subsystem to Environment						
Urine to Earth	1.83 (1)	0.16 (1)	✗	✗	✗	Assumption: Stowage in EDV.
Solid Waste to Earth	☑	☑	☑	☑	☑	
Vacuum Vent (Lyophilizer)	✗	✗	✗	✗	✗	Mass losses for Air and Water to be determined.
Subtotal	**3.38**	**1.71**	**1.55**	**1.55**	**0.63**	

References: (1) Jones (2000); (2) Wieland (1998a and 1998b); (3) Flynn (2003); (4) Carrasquillo, et al. (1997); (5) This current document; (6) Lange (1998); (7) Lin (1998).

Table 4.3.3 International Space Station Reference Mission Vehicle Wastes (concluded)

	Assumptions [kg/CM-d]					
Component	**Russian On-Orbit Segment, Phase 2**	**Russian On-Orbit Segment, Phase 3**	**ISS United States On-Orbit Segment, Phase 3**	**ELS United States On-Orbit Segment, Post-Phase 2**	**ELS United States On-Orbit Segment, Phase 3**	**Notes**
Water Subsystem						
Air Evaporator Wicks	✗	✗	✗	0.08 [6]	0.04 [6]	This value includes air evaporator wicks and urine solids. Assumption: Cases with a biological water processor are 50% less massive.
Flush Water	0.00 [2]	0.00 [2]	0.00 [2]	0.00 [2]	0.00 [2]	None identified to date.
Greywater from Dryer to Water Subsystem	✗	✗	✗	✗		
Urine Processing System Brine to Waste Subsystem	✗	☑	☑	✗	✗	
Urine to Water Subsystem	✗	☑	☑	☑	☑	
Urine Processor	✗	☑	0.33 [1,7]	☑	☑	This entry based on vapor compression distillation performance. Brine is stored in an EDV (Russian wastewater container).
Water Processor Spares	0.33 [4]	0.33 [4]	0.33 [4]	TBD	TBD	
Miscellaneous	0.89 [5]	0.89 [5]	0.89 [5]	0.89 [5]	0.89 [5]	Based on ISS data for Assembly Complete.
Subtotal	**1.22**	**1.22**	**1.55**	**0.97**	**0.93**	
Overall Total	**5.14**	**3.47**	**3.61**	**3.03**	**1.69**	

References: [1] Jones (2000); [2] Wieland (1998a and 1998b); [3] Flynn (2003); [4] Carrasquillo, et al. (1997); [5] This current document; [6] Lange (1998); [7] Lin (1998).

Table 4.3.4 Advanced Mars Exploration Reference Mission Vehicle Wastes

	Assumptions [kg/CM-d]					
Component	**ISS Mars Transit Vehicle**	**ISS Surface Habitat Lander**	**ISS Mars Decent / Ascent Lander**	**ELS Mars Transit Vehicle**	**ELS Surface Habitat Lander**	**Notes**
Waste Subsystem Hardware						
Compactor	☑	☑	✗	☑	☑	Compactors reduce waste volume and waste storage containment mass
Commode	☑	☑	☑	☑	☑	
Dryer	✗	✗	✗	✗	☑	
Fecal Storage	0.50 (1)	0.50 (1)	0.50 (1)	0.50 (1)	0.13 (1)	This entry includes the Russian KTO (Russian solid waste container). Usage is based on mass of waste. Mass of waste depends on moisture content, which varies between options.
Lyophilization	✗	✗	✗	✗	☑	This technology yields a dry, stable solid waste and a separate greywater component.
Solid Waste Storage	☑	☑	☑	☑	☑	
Urinal	☑	☑	☑	☑	☑	
Urine Pretreatment	0.01 (2)	0.01 (2)	0.01 (2)	0.01 (2)	✗ (3)	This entry reflects chemical pretreatment, whether Russian or U.S. This is the mass of pretreatment chemicals only.
Subtotal	**0.51**	**0.51**	**0.51**	**0.51**	**0.13**	

References: (1) Jones (2000); (2) Wieland (1998a and 1998b); (3) Flynn (2003); (4) Carrasquillo, et al. (1997); (5) This current document; (6) Lange (1998); (7) Lin (1998).

Table 4.3.4 Advanced Mars Exploration Reference Mission Vehicle Wastes (continued)

Component	Assumptions [kg/CM-d] ISS Mars Transit Vehicle	ISS Surface Habitat Lander	ISS Mars Decent / Ascent Lander	ELS Mars Transit Vehicle	ELS Surface Habitat Lander	Notes
Waste Subsystem Interfaces						
Air Subsystem	0.13 [4]	0.13 [4]	0.13 [4]	0.13 [4]	0.13 [4]	Based on ISS data at Assembly Complete. Reflects spares for the Air Subsystem.
Extravehicular Activity Support External Interface Wastes	×	0.25 [5]	0.25 [5]	×	0.25 [5]	The difference in values reflects variations in EVA workload.
Food External Interface Wastes						
Prepackaged Food Wastes	0.32 [5]	0.32 [5]	0.32 [5]	0.32 [5]	0.28 [5]	Assumption: Biomass production reduces prepackaged food mass slightly.
Inedible Biomass	×	×	×	0.01	0.01	Estimates assume 1 m² of growing area producing 0.1 kg/d fresh biomass with at 90% harvest index and 90% moisture content.
Habitation Subsystem Wastes						
Expended Clothing	0.82 [5]	0.82 [5]	0.82 [5]	0.02 [5]	0.02 [5]	Clothing mass reduced by a factor of 40 with laundry. Assumption: 50% initial water content.
Hygiene Wipes	0.23 [5]	0.23 [5]	0.23 [5]	0.23 [5]	0.15 [5]	
Thermal External Interface Wastes	0.03 [4]	0.03 [4]	0.03 [4]	0.03 [4]	0.03 [4]	Based on ISS data for Assembly Complete.
Waste Subsystem to Environment						
Urine to Earth	×	×	×	×	×	Assumption: Stowage in EDV.
Solid Waste to Earth	×	×	×	×	×	
Vacuum Vent (Lyophilizer)	×	×	×	×	☑	Mass losses for Air and Water to be determined.
Subtotal	**1.53**	**1.78**	**1.78**	**0.74**	**0.87**	

References: [1] Jones (2000); [2] Wieland (1998a and 1998b); [3] Flynn (2003); [4] Carrasquillo, et al. (1997); [5] This current document; [6] Lange (1998); [7] Lin (1998).

Table 4.3.4 Advanced Mars Exploration Reference Mission Vehicle Wastes (concluded)

	Assumptions [kg/CM-d]					
Component	**ISS Mars Transit Vehicle**	**ISS Surface Habitat Lander**	**ISS Mars Decent / Ascent Lander**	**ELS Mars Transit Vehicle**	**ELS Surface Habitat Lander**	**Notes**
Water Subsystem						
Air Evaporator Wicks	✗	✗	✗	0.08 [6]	0.04 [6]	This value includes air evaporator wicks and urine solids. Assumption: Cases with a biological water processor are 50% less massive.
Flush Water	0.00 [2]	0.00 [2]	0.00 [2]	0.00 [2]	0.00 [2]	None identified to date.
Greywater from Dryer to Water Subsystem	✗	✗	✗	✗	☑	
Urine Processing System Brine to Waste Subsystem	☑	☑	✗	✗	✗	
Urine to Water Subsystem	☑	☑	☑	☑	☑	
Urine Processor	0.33 [1,7]	0.33 [1,7]	✗	0.33 [1,7]	☑	This entry based on vapor compression distillation performance. Brine is stored in an EDV (Russian wastewater container).
Water Processor Spares	TBD	TBD	TBD	TBD	TBD	
Miscellaneous	0.89 [5]	0.89 [5]	0.89 [5]	0.89 [5]	0.89 [5]	Based on ISS data for Assembly Complete.
Subtotal	**1.22**	**1.22**	**0.89**	**1.30**	**0.93**	
Overall Total	**3.26**	**3.51**	**3.18**	**2.55**	**1.93**	

References: [1] Jones (2000); [2] Wieland (1998a and 1998b); [3] Flynn (2003); [4] Carrasquillo, et al. (1997); [5] This current document; [6] Lange (1998); [7] Lin (1998).

The crew contribution to the waste stream can enter more than one subsystem or interface. For example, the crew respiration and perspiration load is first received by the life support system within the Air Subsystem, in the form of water vapor, or by the Human Accommodations Interface, on the clothing or as the result of crew hygiene maintenance such as bathing. Thus, it is difficult to account for all crew-generated wastes when they are divided between, and applied to, various subsystems and interfaces, and even more difficult to make assumptions as to percentages accepted by those subsystems and interfaces.

The overall waste generation rates, including both Russian and United States On-Orbit Segments, listed in Table 4.3.3 include all currently known waste streams. This table should be close to actual waste loads for future long duration missions. There are, however, significant gaps in the data, and the total will be greater than what is listed here.

4.3.4 SOLID WASTE MANAGEMENT FOR FUTURE LONG-DURATION MISSIONS

Waste treatment and removal for missions to Mars and other likely near-term destinations will be more challenging due to the longer mission duration regardless of complications from the environment. Waste management for such missions may employ more efficient versions of technologies developed for Shuttle and ISS, or completely different approaches may be more cost effective. Future missions may also generate significant amounts of inedible biomass. In later or far-term missions, inedible biomass may dominate all other trash sources. See, for example, Table 5.2.27. Finally, depending on the mission protocols, indefinite stable storage for the end products of any waste-processing scheme may be necessary.

Historically, wastes generated during human spaceflight are materials with no further utility that require storage at least until the mission is complete. However, advanced Waste Subsystems may reclaim valuable resources from input wastes to allow greater closure within the overall life support system.

The following tables provide mass data for various waste products, organized by references. Though unavailable here, waste volumes can be significant. Further, although wastes are listed separately below, some wastes may be contained in or associated with other wastes. For example, feces may adhere to toilet paper, wasted food may adhere to corresponding food packaging, and miscellaneous body wastes may adhere to hygiene wipes and dissolve or suspend in hygiene water. Also, various degrees of source separation are possible. For example, contaminated toilet paper might be collected in a container separate from the feces collector, or contaminated food packages might be collected separately from wasted food.

These tables do not list all possible waste types for human spaceflight. Because many spacecraft systems routinely replace parts during scheduled maintenance on long-duration missions, a comprehensive list of wastes is contingent upon the hardware and configurations used throughout the vehicle. Thus, for a full understanding of equipment-related wastes during a particular mission, the replaceable units for each piece of hardware must be known, including any associated packaging. Rather, the tables list the wastes that are commonly of interest to advanced waste technology developers, due to an anticipated presence or processing potential. Processing potential may be related to resource recovery potential and anticipated pre-disposal treatment requirements. The tables list materials that have historically been sent to the Waste Subsystem. Thus, wastes such as carbon dioxide gas and trace contaminants are not included here.

As noted above, most wastes depend upon the life support system or vehicle design. For example, the rate of clothing supply and associated waste generation depends on the presence of a laundry system. The rate waste is generated from food packaging depends on the degree of food bioregeneration, or crop growth, within the vehicle. Further, the quantity and composition metabolic wastes depend on the composition and quantity of food consumed; greater metabolic demands and greater consumption of dietary fiber may alter the generation rate for feces.

The tables present several mass values for some wastes and both moist and dry components are included. In such cases, an asterisk denotes the "preferred" or suggested value for waste models if an entry for that particular waste is appropriate but other important defining factors about the waste are unknown. The suggested values are also summarized in Table 4.3.5. When known, the data variability is provided below. Further, when known, variation of waste mass and composition with particular environmental parameters are noted, allowing for customization of waste characteristics for a specific purpose. The degree of confidence in data values is highly variable and often unknown. In some cases, data have not been diligently collected, and mass estimates are included. In other cases, the values are contingent upon environmental variables. Finally, the original or earliest data source available for a particular value is listed first, followed by other sources that reference the earliest source.

Table 4.3.5 Summary Information on Wastes for Developing Waste Models for Future Long-Duration Missions [90]

Waste	Assumptions [g/CM-d] lower	Nominal	upper
Equipment Wastes		TBD (1)	
Experiment Wastes		TBD (1)	
Extravehicular Activity Maximum Absorption Garments (MAGs) [91]		173 (1) [91]	
Feminine Wastes: [92]			
Menstrual Hygiene Products		104 (2) [92]	
Menses		113.4 (2) [92]	
Food Packaging and Adhered Food		324 (3)	
Gloves		7 (4)	
Grey or Duct Tape		33 (5)	
Greywater		TBD (6)	
Greywater Brine		TBD (6)	
Human Detritus:			
Finger and Toe Nails		0.01 (7)	
Hair		0.33 (7)	
Mucus		0.4 (7)	
Saliva Solids		0.01 (7)	
Skin Cells		3 (7)	
Skin Oils		4 (7)	
Sweat Solids		8 (7)	
Hygiene Products, Miscellaneous		TBD (5)	
Inedible Biomass and Wasted Crop Materials		TBD (3)	
Laundry: Clothing, Towels and Wash Cloths		TBD (5)	
Medical Wastes		TBD (1)	
Metabolic Wastes:			
Feces		123 (8)	
Urine		1,562 (9)	
Paper		77 (5)	
Wipes:			
Toilet Paper		28 (10)	
Wipes, Detergent		58 (4)	
Wipes, Disinfectant		56 (4)	
Wipes, Dry		13 (4)	
Wipes, Wet		51 (4)	

References

(1) See Table 4.3.14
(2) See Table 4.3.8
(3) See Table 4.3.12
(4) See Table 4.3.11
(5) See Table 4.3.13
(6) See Section 4.3.4.9
(7) See Table 4.3.10
(8) See Table 4.3.6
(9) See Table 4.3.7
(10) See Table 4.3.9

[90] This table includes both wet and dry components. Component moisture content is presented in the references.
[91] Units for this category: grams per crewmember per EVA event [g/CM-EVA].
[92] The waste production rates in this category only exist for a woman during her menstrual period. Thus, units for this category are: grams per crewmember per menstrual period [g/CM-$\wp$].

4.3.4.1 FECES

The mass and composition of feces varies with, among other factors, the quantity and composition of consumed food. Additional fiber in the diet is known to increase daily stool mass (Tucker, *et al.*, 1981). Wydeven and Golub (1990) provide general detailed estimates of dry human feces. Hawk (1965) states "…the amount of fecal discharge varies with the individual and diet. Various authorities claim that on an ordinary mixed diet the daily excretion by an adult male will aggregate 110-170 g with a solid content ranging between 25 and 45 g; the fecal discharge of such an individual on a vegetable diet will be much greater and may even be as great as 350 g and possess a solid content of 75 g."

MSIS (1995) states that the fecal collection system shall have the capacity to accommodate fecal matter of 400 g/CM-d by mass and 300 mL/CM-d by volume and a maximum bolus length of 330 mm. MSIS (1995) also states that the fecal collection device shall have the capacity to accommodate a maximum of 1000 mL of diarrhea discharge.

Finally, depending on the post-defecation cleansing methods, portions of feces may adhere to toilet paper or wipes. Table 4.3.6 summarizes information on feces.

Table 4.3.6 Information on Feces

Waste	Units	Value	Comments
Feces	g/CM-d	* 123 [1]	Composition: 32 g/CM-d solids and 91 g/CM-d water. Metabolic Energy: 11.82 MJ/CM-d. Ingested Food Composition: not available.
	g/CM-d	114 [2]	Composition: 32 g/CM-d "dehydrated residue" (4.5 g/CM-d fat, 4.5 g/CM-d protein, 1.8 g/CM-d cellulose, 9.5 g/CM-d inorganic matter, 11.4 g/CM-d bound water) and 82 g/CM-d water. Metabolic Energy: not available. Ingested Food Composition: not available.
	g/CM-d	120 [3,4]	Composition: 20 g/CM-d solids and 100 g/CM-d water. Metabolic Energy: 11.82 MJ/CM-d (assumed). Ingested Food Composition: not available.
	g/CM-d	95.5 [5,6]	Composition: 20.5 g/CM-d solids (19.5 g/CM-d standard deviation) and 75 g/CM-d water. Metabolic Energy: not available. Ingested Food Composition: "relatively low fiber diet, not unlike that eaten while in space." Note: 24 h mean sample; standard deviation of 95.7 g/CM-d.
	g/CM-d	132 [7]	Composition: 21 g/CM-d solids and 111 g/CM-d water. Metabolic Energy: not available. Ingested Food Composition: not available.
	g/CM-d	30 [8]	Composition: 30 g/CM-d solids. Metabolic Energy: not available. Ingested Food Composition: not available. Note: ***Dry mass only.*** Wet mass unavailable.

Table References: [1] NASA (1991), [2] LSDB (1962), [3] BDB (1973), [4] Parker and Gallagher (1992), [5] Wydeven and Golub (1990), [6] Diem and Lentner (1970), [7] Schubert, *et al.* (1984), [8] Tucker, *et al.* (1981).

4.3.4.2 URINE

The mass and composition of urine varies with the individual, with the quantity and composition water and food consumed, as well as with other factors. Wydeven and Golub (1990) provide general detailed estimates of human urine.

MSIS (1995) states that the urine collection devices shall have the capacity to accommodate a maximum urine output volume of 4,000 mL/CM-d and a discharge up to 800 mL in a single urination event at a delivery rate of 50 mL/s.

Depending on the post-urination-event cleansing methods, urine may adhere to toilet paper or wipes. Depending on the life support system configuration, urine may or may not be included with greywater. Table 4.3.7 summarizes information on urine.

* An asterisk denotes a suggested value. If a particular waste component is essential for a waste model, but details on the waste component's generation are unknown, the suggested value is recommended.

Table 4.3.7 Information on Urine

Waste	Units	Value	Comments
Urine	g/CM-d	* 1,562 (1-4)	Composition: 59 g/CM-d solids and 1,503 g/CM-d water. Ingested Food Composition: not available.
	g/CM-d	1,700 (5)	Composition: 70 g/CM-d solids and 1,630 g/CM-d water. Ingested Food Composition: not available.
	g/CM-d	1,470 (6)	Composition: 70 g/CM-d solids and 1,400 g/CM-d water. Ingested Food Composition: not available.
	g/CM-d	2,107 (7,8)	Composition: not available. Ingested Food Composition: not available. Note: 24 h mean sample; standard deviation of 1,259 g/CM-d. [93] The wet mass was calculated from urine volumes assuming a density of 1.02 g/mL.
	g/CM-d	1,390 (9)	Composition: not available. Ingested Food Composition: not available. Note: The wet mass was calculated from urine volumes assuming a density of 1.02 g/mL.

Table References: (1) BDB (1973), (2) NASA (1991), (3) Wydeven and Golub (1990), (4) Schubert, *et al.* (1984), (5) MSIS (1995), (6) LSDB (1962), (7) Parker and Gallagher (1988), (8) Diem and Lentner (1970), (9) Leach (1983).

4.3.4.3 MENSTRUATION

Normally, adult female human beings menstruate once every 26 to 34 days for a duration of 4 to 6 days (MSIS, 1995). These excretion products provide another possible waste generation mechanism. Menstrual flow is highly variable between individuals. Consequently, menstrual pad and tampon use is also highly variable between individuals. Female crewmembers on ISS use medication before flight to prevent menstruation for up to six months during flight. This approach, for many reasons, may not be acceptable for longer duration flights. Depending on the menstruation management and cleansing method used, menses may adhere to tampons, menstrual pads, toilet paper, or wipes. Table 4.3.8 summarizes information on menstruation using units of grams per crewmember per menstrual cycle [g/CM-$\wp$].

Table 4.3.8 Information on Menstruation

Waste	Units	Value	Comments
Menses	g/CM-$\wp$	* 113.4 (1)	Composition: 80% is released during the first 3 d of menstruation. Note: Menstrual period duration is 4 to 6 d every 26 to 34 d.
	g/CM-$\wp$	28 (2,3)	Composition: 10 g/CM-$\wp$ solids (estimated).
Menstrual Pads and Tampons	g/CM-$\wp$	104 (3)	Note: Mean estimated tampon or menstrual pad usage is 16.2 products/CM-$\wp$. The average menstrual product (menstrual pads or tampons) is 6.4 g/product (clean).

Table References: (1) MSIS (1995), (2) Hallberg and Nilsson (1964), (3) Parker and Gallagher (1992).

4.3.4.4 TOILET PAPER

Toilet paper usage varies with production rates and consistency of metabolic waste excretions. For all crewmembers, toilet paper is an important cleansing agent following a bowel movement. Additionally, female crewmembers use toilet paper following urination events and menstrual discharges. Because of relatively frequent resupply, toilet paper usage on current human missions, such as ISS, may not be as frugal as possible for longer-duration missions with more-limited or no resupply. Thus, the value provided in Table 4.3.9 may be an upper limit.

---

[93] 78% of the variation in urine output could be explained by variations in fluid consumed.

* An asterisk denotes a suggested value. If a particular waste component is essential for a waste model, but details on the waste component's generation are unknown, the suggested value is recommended.

MSIS (1995) states "In microgravity, [94] many more tissues are needed for cleansing the anal areas after defecation, because gravitational forces are not present to aid in separation of the feces from the body."

If used as a means for post-defecation, post-urination and menstruation cleansing, toilet paper may contain feces, urine, and menses. Table 4.3.9 summarizes information on toilet paper usage.

Table 4.3.9 Information on Toilet Paper

Waste	Units	Value	Comments
Toilet Paper	g/CM-d	* 28 (1) [95]	
	g/CM-d	5.1 (2,3)	Note: Value computed assuming 6.0 g per bowel movement and 0.86 bowel movements/CM-d based on statistical data. Additionally, for female crewmembers, add 36 g/CM-d to support post-urination cleansing following each of 6 urinations/CM-d.

Table References: (1) Maxwell (2001a), (2) Parker and Gallagher (1992), (3) Wydeven and Golub (1990).

4.3.4.5 MISCELLANEOUS BODY WASTES

In addition to metabolic excretions, human beings also shed various wastes from the exposed surfaces of their bodies. These include sweat solids, dead skin cells and associated oils, hair, saliva solids, mucus, and finger and toe nails. Estimates and data for these waste stream components are detailed in Table 4.3.10.

Sweat solids may adhere to clothing, hygiene wipes, towels, wash cloths, and dissolve or suspend in hygiene greywater. Wydeven, and Golub (1990) and BDB (1973) provide approximate compositions for dry solids in sweat.

Dead skin cells, once free from the surface of the body, exist as cabin "dust," and collect in the cabin air filter. However, some skin cells may adhere to clothing, hygiene wipes, towels, washcloths, or suspend in hygiene greywater. Wydeven, *et al.* (1989) provides estimates for particle and dust generation rates by human beings within a space station.

Finally, skin oils, hair, saliva solids, and mucus may adhere to clothing, hygiene wipes, towels, washcloths, or suspend in hygiene greywater. Estimated generation rates for all these human byproducts are provided in Table 4.3.10.

Table 4.3.10 Information on Miscellaneous Body Wastes

Waste	Units	Value	Comments
Sweat Solids	g/CM-d	* 18 (1)	
	g/CM-d	3 (2,3)	
Skin Cells	g/CM-d	3 (2,3)	
Skin Oils	g/CM-d	4 (2,3)	
Hair	g/CM-d	0.33 (2,3)	Composition: 0.3 g/CM-d for facial shaving and 0.03 g/CM-d for depilation. Note: The study used only male subjects.
Saliva Solids	g/CM-d	0.01 (2,3)	
Mucus	g/CM-d	0.4 (2,3)	
Finger and Toe Nails	g/CM-d	0.01 (2,3)	

Table References: (1) NASA (1991), (2) LSDB (1962), (3) MSIS (1995).

4.3.4.6 CONSUMABLE HYGIENE PRODUCTS

Aboard ISS, crewmembers use a variety of wipes and gloves for various housekeeping and hygiene tasks. Maxwell (2001a) estimates consumption rates for these items based on ISS usage.

---

94 See Footnote 62.

95 Charmin (2002) claims that "the average person uses 57 sheets [of toilet paper] per day," or 23 g/CM-d.

* An asterisk denotes a suggested value. If a particular waste component is essential for a waste model, but details on the waste component's generation are unknown, the suggested value is recommended.

Though confirmed only verbally, gloves are used at a rate of one glove per day to clean the toilet after defecation. These gloves are non-powdered, medium, latex laboratory gloves. Following use, human metabolic wastes, such as feces or urine, may adhere to the gloves.

Wipes are essential to many tasks aboard ISS and the estimated consumption rates here are based on ISS usage. Four types of wipes are listed below, though detergent and disinfectant wipes are the same as wet wipes with a commercial detergent or disinfectant solution applied to them. Because of relatively frequent resupply, wipe usage on current human missions, such as ISS, may not be as frugal as possible for longer-duration missions with more-limited or no resupply. Thus, the values provided in Table 4.3.11 may be an upper limit.

Table 4.3.11 Information on Consumable Hygiene Products

Waste	Units	Value	Comments
Gloves	g/CM-d	7 (1)	Usage: 1 glove/CM-d to clean the toilet following defecation.
Wipes			
Dry	g/CM-d	13 (1)	Usage: This is equivalent to 3 Kimwipe® brand, low-lint 29.2 cm by 30.5 cm wipes/CM-d.
Wet	g/CM-d	51 (1)	Usage: This is equivalent to 4.7 Huggies® brand wet baby wipes/CM-d. Clark (2003) states that Huggies® wet baby wipes at 75% moisture have a mass of 10.9 g/wipe.
Detergent	g/CM-d	58 (1)	
Disinfectant	g/CM-d	56 (1)	

Table Reference: (1) Maxwell (2001a).

4.3.4.7 FOOD PACKAGING, INEDIBLE BIOMASS, AND WASTED FOOD

The food system, whether prepackaged or based on the conversion of crops, invariably generates a significant and unique waste stream. Prepackaged food systems generate waste streams including packaging, comprised of plastic bonded to a metallic layer, with adhered food. Crop-based food systems generate wastes associated with the crops and with the conversion of crops to finished entrees. Finally, the crew for many reasons may waste food in either system.

The first estimate in Table 4.3.12 provides an estimate of the minimal waste stream from a prepackaged-food system. Levri, *et al.* (2001) assumed ambient-stored, prepackaged food, similar in nature to the Shuttle Training Menu. Further, each crewmember requires metabolic energy from food of 11.82 MJ/CM-d and only 3% of all prepackaged food and rehydration water is wasted. This is a lower practical wastage limit to estimate the material wasted if the crew attempted to eat all of the food in every package that is opened. The food wastage represents approximately 3% of prepackaged food and rehydration water adheres to the sides of the packaging. Additionally, this study assumed that a small salad crop provides less than 1% of the crew's food energy needs.

The second estimate, from Maxwell (2001b), an unpublished source to date, studied actual ISS food usage rates. This study collected information on the preferred menus of three ISS occupants during one expedition and computed the daily average per crewmember usage rates for food, packaging, and rehydration water. This study additionally assumed that 15% of all food packages shipped to ISS were unopened and discarded and that 5% of all opened food with any rehydration water was discarded while adhered to the food packaging. The actual values in Table 4.3.12 assume modified packaging numbers to reflect more recent food packaging mass data as presented in Levri, *et al.* (2001). Further, because actual crewmembers are not nominal crewmembers, the nominal metabolic energy of 11.82 MJ/CM-d does not apply to these data. Lastly, food wastage assumptions for future long-duration missions are usually more conservative than ISS usage values because resupply may be more limited or completely nonexistent.

Crops and food processing may generate wastes during crop production, in the form of inedible biomass and expended nutrient solution or other growth support agents, and post-harvest during the production of food products and meals from the crops, in the form of wasted edible biomass, cleansing agents, food preparation fluids and agents, and even plate waste. These waste generation rates are highly variable and mission dependent.

Table 4.3.12 summarizes information on food packaging, inedible biomass, and wasted food.

* An asterisk denotes a suggested value. If a particular waste component is essential for a waste model, but details on the waste component's generation are unknown, the suggested value is recommended.

Table 4.3.12 Information on Food Packaging, Inedible Biomass, and Wasted Food

Waste	Units	Value	Comments
Food Packaging and Adhered Food	g/CM-d	* 324 [(1)]	Composition: 62 g/CM-d adhered food (~73% moisture content, including beverages) and 262 g/CM-d plastic packaging. Metabolic Energy: 11.82 MJ/CM-d. Ingested Food Composition: ambient-stored, prepackaged food system.
	g/CM-d	508 [(2)]	Composition: 206 g/CM-d unopened food (175 g/CM-d food and 31 g/CM-d plastic packaging) and 302 g/CM-d adhered food and packaging waste (58 g/CM-d food, 176 g/CM-d plastic packaging, and 68 g/CM-d rehydration water). Metabolic Energy: not available. Ingested Food Composition: ambient-stored, prepackaged food system.
Inedible Biomass and Wasted Crop Materials	g/CM-d	TBD	Note: Highly mission dependent. See Table 5.2.25 for inedible biomass productivity under typical crop growth chamber conditions. See Table 5.2.27 for examples of diets using crops.

Table References: [(1)] Levri, *et al.* (2001), [(2)] Maxwell (2001b).

4.3.4.8 PAPER, TAPE, MISCELLANEOUS HYGIENE PRODUCTS, AND CLOTHING

Human activities generate a number of waste streams not related to metabolic activity. In particular, documentation generates waste paper, tape is used to seal plastic garbage bags, crew hygiene activities contribute many items to the waste stream, and clothing, when used, adds another waste stream for long-duration missions.

ISS uses paper for documentation and the data point in Table 4.3.13 is based on ISS usage rates. Waste paper generation rates can vary significantly between ISS increments and may not be closely correlated to the number of crewmembers. It is theorized that the relatively frequent upload and download of supplies to ISS is strongly related to the somewhat high rate of waste paper generation from documentation. Much lower waste paper generation rates for documentation are likely on longer-duration missions with little or no resupply.

Grey or duct tape has traditionally been used on Shuttle and ISS missions to bind bags of trash. On future missions, the crew may utilize other approaches for sealing trash bags and other tasks where tape might be used. Thus, tape usage is contingent on vehicle design.

As noted in Table 4.3.13, waste generation rates associated with personal hygiene products can be significant. The data here are based on ISS usage rates. These values may include items such as dental floss, toothbrushes, containers for toothpaste, shave cream, razors, mouthwash, shampoo, moisturizing lotion, deodorant, sun block, chap stick, makeup, and similar personal hygiene products. The value here should probably be considered a historical point, and future long-duration missions with little or no resupply will be much lower. Theoretically, the relatively frequent resupply schedule for ISS is strongly correlated to the surprisingly high rate of miscellaneous hygiene product waste generation.

Clothing usage and associated dirty clothing generation rates are also significant historically, as documented in Table 4.2.1 for ISS. Actual expended clothing generation rates are strongly correlated to how long clothing may be used before it is sufficiently worn or dirty that it is no longer fit for use. A laundry can increase clothing life, thus reducing waste generation rates associated with discarded clothing, at a cost of other vehicle resources such as power, crewtime, and water usage.

As a simplifying assumption, clothing is comprised of 100% cotton and has 8.5% moisture content when clean and dry, which is an industry standard for cotton. Actual clothing may be comprised of other materials that are more efficient and fire retardant, but historically crewmembers prefer clothing with higher cotton content. However, clothing will probably not be discarded in clean form. Rather, clothing, towels, and washcloths will likely contain skin cells, sweat solids, skin oil, hair, and other miscellaneous body wastes. Towels and washcloths will likely also contain moisture from sweat and bathing.

* An asterisk denotes a suggested value. If a particular waste component is essential for a waste model, but details on the waste component's generation are unknown, the suggested value is recommended.

McGlothlin (2000) reports that the average 49-g Class III [96] Shuttle washcloth, measuring 30.5 cm by 30.5 cm and comprised of 100% cotton, retains up to 202 g of water when completely soaked.

Table 4.3.13 summarizes information on waste streams from paper, tape, miscellaneous hygiene products, and clothing.

Table 4.3.13 Information on Paper, Tape, Miscellaneous Hygiene Products, and Clothing

Waste	Units	Value	Comments
Paper	g/CM-d	77 (1)	Composition: 6% moisture content.
Grey or Duct Tape	g/CM-d	33 (2)	Note: This value is highly design contingent. The value here represents ISS usage.
Misc. Hygiene Products	g/CM-d	781 (1)	Note: This value is highly design contingent. The value here represents ISS usage. Future missions may allow much lower waste generation rates from miscellaneous hygiene products.
Clothing, Towels, and Wash-cloths	g/CM-d	TBD	Composition: 100% cotton solids, with 8.5% moisture content (clean and dry). Note: See Table 4.2.1 for expended clothing generation rates.

Table References: (1) Maxwell (2001b), (2) Wydeven, *et al.* (1989).

4.3.4.9 GREYWATER AND BRINE

Wastewater and brines, though historically processed by the Water Subsystem, may initially or after processing pass to the Waste Subsystem. Section 4.4 lists wastewater generation rates and stream compositions. However, these tables do not provide greywater generation data for configurations with crop production or food processing. Greywater production from such activities depends on the crops produced, the growing techniques, the crop processing approaches following harvest, the food processing technology, and the processing equipment and crop cleansing approaches. Finally, greywater may also include urine.

In general, greywater production rates and, more importantly here, the rate of wastewater transfer to the Waste Subsystem, are highly dependent upon the vehicle design. The individual greywater production rates are variable, and decisions about how the wastewater streams are managed significantly influence the wastewater and brine loads passed to the Waste Subsystem.

Brine production rates depend primarily upon the architecture of the water system. If greywater is processed for reuse, the degree of recovery determines the composition of the brine remaining after treatment. Most advanced physicochemical water processors recover up to 95 to more than 99% of the water within the input greywater stream.

4.3.4.10 OTHER WASTE STREAMS

Several other notable waste streams are possible. Wastes associated with extravehicular activities depend on the frequency of extravehicular activities. Other waste streams from equipment, experiments, and medical tests are highly variable and depend on the vehicle and mission architecture.

Extravehicular activities (EVA) supply waste streams to the life support system. While some wastes are gaseous, others are solid wastes. Most significantly, crewmembers are provided with a maximum absorption garment (MAG) to catch metabolic wastes. A used garment may be contaminated with urine, feces, and other wastes associated with exposure to human skin. The data in Table 4.3.14 is based on ISS equipment and production rates in terms of grams per crewmember per EVA sortie [g/CM-EVA]. Data on other likely EVA wastes, such as food sticks, drink pouches, and batteries, were unavailable. EVA consumption rates for consumables are given in Table 5.1.5, although these values do not reflect solid waste production rates.

Equipment wastes are highly variable and depend upon the overall vehicle design. Equipment wastes include supplies for life support hardware, such as filters and plastic bags. Generally, the Waste Subsystem design depends upon the life support system architecture, including the degree of resource recovery and containment for pre-processing storage, post-processing storage, and disposal. For example, a system in which there is no recovery from solid wastes, such as on ISS, may require more Waste

[96] Note: "Class III" hardware is dimensionally the same and functionally similar to flight, or "Class I," hardware. However, Class III hardware is not, in general, identical to Class I hardware.

* An asterisk denotes a suggested value. If a particular waste component is essential for a waste model, but details on the waste component's generation are unknown, the suggested value is recommended.

Subsystem resupply items than a system that reuses or recovers resources. Regarding storage options, some equipment wastes might be returned to its original stowage volumes, although cleaning may be required before such an approach is acceptable. For example, contaminated membranes from the Water Subsystem might be cleaned to remove water wastes and then stowed in the original stowage volume for membranes.

Experimental wastes are highly variable and depend upon experimental procedures and the mission objectives. Some waste materials may be hazardous.

Medical wastes are also highly variable and depend upon medical protocol. These waste loads could be very sporadic and may require special handling. Some waste product materials may even be a biohazard.

Table 4.3.14 summarizes information on EVA, equipment, experiment, and medical waste streams.

Table 4.3.14 Information on Other Waste Streams

Waste	Units	Value	Comments
EVA Wastes	g/CM-EVA	173 (1)	Note: This value represents the maximum absorption garment (clean and dry)
Equipment Wastes	g/CM-d	TBD	Note: Highly variable and dependent on vehicle design.
Experiment Wastes	g/CM-d	TBD	Note: Highly variable and dependent on mission design. Waste streams delegated to the Waste Subsystem will depend on mission protocols. Some wastes may be hazardous.
Medical Wastes	g/CM-d	TBD	Note: Highly variable and dependent on mission medical protocol. Waste streams delegated to the Waste Subsystem will depend on mission protocols. Some wastes may be biohazards.

Table Reference: (1) EDCC (1998).

* An asterisk denotes a suggested value. If a particular waste component is essential for a waste model, but details on the waste component's generation are unknown, the suggested value is recommended.

4.4 WATER SUBSYSTEM

Water may not be the most time-critical life support commodity, but water regeneration streams are the most massive. Further, water quality is also of great concern with respect to crew safety. No single technology has proven adequate for water regeneration to date. Instead, a suite of complimentary technologies must be employed. In the past, power use has driven water regeneration. However, other infrastructure costs are also important.

4.4.1 DESIGN VALUES FOR WATER SUBSYSTEMS

Clean water is required for drinks, food preparation, personal hygiene, and possibly for cleaning clothes and equipment. Water quality standards will vary, but they might include potable, hygiene, technical, and plant-transpired water. The tables here provide anticipated usage rates for several scenarios. The values here are averages during nominal operation of the life support system. Degraded or emergency life support system values may be different. Table 4.4.1 lists steady-state water usage estimates for missions of 30 days or less. Table 4.4.2 lists steady-state water usage estimates for longer duration missions. More importantly here, Table 4.4.3 details anticipated wastewater generation rates to be processed by the Water Subsystem for long-duration missions. Please note that the water usage rates and wastewater generation rates sometimes differ, as a quick comparison of Table 4.4.2 to Table 4.4.3 confirms. In some cases either the water usage or wastewater generation rates are unknown. In other cases water usage does not correspond to wastewater generated and sent to the Water Subsystem, depending upon the configuration of the system using the water.

The mission scenarios are defined as: assembly complete International Space Station, assumed as lacking a waste and hygiene compartment; a transit mission, currently assumed to have similar hygiene capabilities as ISS; Early Planetary Base, assumed to have the capability for limited hygiene water use; and Mature Planetary Base, assumed to have the capability for full hygiene water use as well as a biomass production chamber for food cultivation.

Table 4.4.1 Steady-State Values for Vehicle Water Usage for Short Duration Missions [97]

Parameter	Units	Assumptions lower	nominal	upper	References
Crew Water Allocation, assuming Minimal Hygiene Water for a Mission Less Than 30 days	kg/CM-d	2.9 (1)	4.5 (2)	7.7 (2)	(1) From Apollo Program via Ewert and Drake (2000) (2) Ewert and Drake (2000)

[97] For information only.

Table 4.4.2 Typical Steady-State Water Usage Rates for Various Missions [98]

Parameter	Units	International Space Station	Transit Vehicle	Early Planetary Base	Mature Planetary Base
Crew Drinks	kg/CM-d	2.00 (2)	2.00 (2)	2.00 (2)	2.00 (2)
Total Metabolic and Related Consumption	*kg/CM-d*	*2.00*	*2.00*	*2.00*	*2.00*
Urinal Flush	kg/CM-d	0.30 (1)	0.30 (1)	0.50 (2)	0.50 (2)
Oral Hygiene	kg/CM-d	0.37 (2)	0.37 (2)	0.37 (2)	0.37 (2)
Hand Wash	kg/CM-d	n/a	n/a	4.08 (2)	4.08 (2)
Shower [99]	kg/CM-d	n/a	n/a	2.72 (2)	2.72 (2)
Laundry	kg/CM-d	n/a	n/a	n/a	12.47 (2)
Dish Wash	kg/CM-d	n/a	n/a	n/a	5.44 (2)
Food Processing and Preparation	kg/CM-d	TBD	TBD	TBD	TBD
Total Hygiene Consumption	*kg/CM-d*	*0.67*	*0.67*	*7.67*	*25.58*
Payload	kg/CM-d	2.18 (1)	TBD (3)	TBD (3)	TBD (3)
Total Payload Consumption	*kg/CM-d*	*2.18*			
Total Water Consumption	***kg/CM-d***	***4.85***	***2.67***	***9.67***	***27.58***
Biomass Production Water Consumption [100]	kg/m²•d	n/a	n/a	n/a	4.00

References

(1) NASA (2004)

(2) NASA (1991)

(3) Architecture dependent.

98 For information only.

99 Assuming one shower per two days.

100 The water quality may differ from the standards for crew use for water provided to plants as nutrient solution. In fact, plants might provide some water reclamation functions even while providing raw agricultural products.

Table 4.4.3 Typical Steady-State Wastewater Generation Rates for Various Missions

Parameter	Units	International Space Station	Transit Vehicle	Early Planetary Base	Mature Planetary Base
Urine	kg/CM-d	1.20 (1)	1.50 (2)	1.50 (2)	1.50 (2)
Urinal Flush	kg/CM-d	0.30 (1)	0.30 (1)	0.50 (2)	0.50 (2)
Total Urine Wastewater Load	*kg/CM-d*	*1.50*	*1.80*	*2.00*	*2.00*
Oral Hygiene	kg/CM-d	n/a	n/a	0.37 (2)	0.37 (2)
Hand Wash	kg/CM-d	n/a	n/a	4.08 (2)	4.08 (2)
Shower [101]	kg/CM-d	n/a	n/a	2.72 (2)	2.72 (2)
Laundry	kg/CM-d	n/a	n/a	n/a	11.87 (2)
Dish Wash	kg/CM-d	n/a	n/a	n/a	5.41 (2)
Food Preparation and Processing	kg/CM-d	n/a	n/a	n/a	TBD
Total Hygiene Wastewater Load	*kg/CM-d*	*0.00*	*0.00*	*7.17*	*24.45+*
Crew Latent Humidity Condensate	kg/CM-d	2.27 (2)	2.27 (2)	2.27 (2)	2.90 (2)
Animal Latent Humidity Condensate	kg/CM-d	n/a	n/a	TBD	TBD
Total Latent Wastewater Load	*kg/CM-d*	*2.27*	*2.27*	*2.27+*	*2.90+*
Payload	kg/CM-d	n/a	n/a	TBD (3)	TBD (3)
Total Payload Wastewater Load	*kg/CM-d*	*0.00*	*0.00*	*0.00+*	*0.00+*
Total Wastewater Load	***kg/CM-d***	***3.77***	***4.07***	***11.44+***	***29.35+***
Biomass Production Wastewater [102]	kg/m²•d	n/a	n/a	n/a	TBD

References

(1) NASA (2004)

(2) NASA (1991)

(3) Architecture dependent.

[101] Assuming one shower per two days.

[102] The water quality may differ from the standards for crew use for water provided to plants as nutrient solution. In fact, plants might provide some water reclamation functions even while providing raw agricultural products.

4.4.2 WASTEWATER COMPONENT CONTAMINANT LOADING

Studies by Carter (1998) and Putnam (1971) provide the data for Table 4.4.4 through Table 4.4.9, which present wastewater stream aqueous contaminant loadings. Work by Carter (1998) focuses on anticipated wastewater streams from ISS systems to aid sizing the ISS water processor. Thus, some contaminants, especially those associated with ISS cleansing agents in the shower (Table 4.4.6) and hygiene (Table 4.4.7) streams, may be unique to ISS. Likewise, wastes listed for the extravehicular mobility unit (Table 4.4.4) are specific to equipment employed by the Shuttle and ISS programs. However, such loadings are likely representative. Work by Putnam (1971) characterized only human urine. The corresponding values given by Carter (1998) for urine reflect the urine processor product stream, as passed to the other ISS water processing equipment, and not an untreated urine stream.

Table 4.4.4 through Table 4.4.9 have a similar format. The first column of each table provides the contaminant name. When the common name differs from IUPAC nomenclature, the IUPAC name appears in brackets. The next two columns, when checked with an "×," identify those compounds in the wastewater stream that are defined as either controlled inorganic compounds (CI) for potable water streams or have an associated SMAC for the cabin atmosphere [103]. The molecular weight (MW) and percent carbon are listed next. The loading density provides the concentration in milligrams of contaminant per liter of wastewater stream. Finally, the last column provides the percentage of the specific contaminant with respect to the total contaminant loading.

Each table is organized in order of descending concentration, or loading density. Those components in aggregate comprising less than five percent of the total contaminant loading, or trace components, are listed below the thick line near the bottom of each table. Trace components that are CI or have a SMAC are listed individually while all other trace components are listed under the generic heading of "constituents totaling less than 5%."

Table 4.4.4 details the anticipated aqueous contaminants in the greywater stream from an extravehicular mobility unit. This stream reflects Shuttle or International Space Station program technology, so a similar stream for an advanced spacesuit may differ. Carter (1998) developed this list based on the International Space Station program.

Table 4.4.4 Wastewater Contaminants in Extravehicular Mobility Unit Stream

Component	CI	SMAC	MW	Percent Carbon [%C]	Concentration [mg/L]	Percent of Total Contam-inants [%]
acetone [2-propanone]		×	58.1	62.0	0.0256	34.4
caprolactam			113.2	63.7	0.0227	30.6
Freon 113 [1,1,2-trichloro-1,2,2-trifluoroethane]	×	×	187.4	12.8	0.0108	14.5
ethylene glycol [1,2-ethandiol]		×	62.1	38.7	0.0035	4.7
tetraoxadodecane [2,5,8,11-tetraoxadodecane]			178.2	53.9	0.0035	4.7
tetradecanol [1-tetradecanol]			214.4	78.4	0.0029	3.9
sulfolane [tetrahydrothiophene-1,1-dioxide]			120.2	40.0	0.0020	2.7
constituents totaling less than 5%					*0.0029*	*3.9*
benzene		×	*78.1*	*92.3*	*0.0002*	*0.3*
toluene		×	*92.1*	*91.2*	*0.0002*	*0.3*
Total					**0.0742**	**100**

Table 4.4.5 lists the anticipated contaminants from the latent condensate derived from the crew cabin. Carter (1998) developed this list based on the International Space Station program.

[103] See ALS RD (2003) for CI and SMAC requirements.

Table 4.4.5 Wastewater Contaminants in Crew Latent Condensate

Component	CI	SMAC	MW	Percent Carbon [%C]	Concentration [mg/L]	Percent of Total Contam-inants [%]
2-propanol		×	60.1	60.0	46.297	18.6
1,2 propanediol			76.1	47.4	45.234	18.2
bicarbonate			61.0	19.7	33.170	13.3
acetic acid [ethanoic acid]		×	60.1	40.0	14.614	5.9
ammonium	×		18.0	0.0	13.527	5.4
caprolactam			113.2	63.7	11.834	4.8
ethylene glycol [1,2-ethandiol]		×	62.1	38.7	10.224	4.1
glycolic acid [hydroxy acetic acid]			76.1	31.6	10.194	4.1
ethanol		×	46.1	52.1	8.181	3.3
formaldehyde [methanal]		×	30.0	40.0	8.136	3.3
formic acid [methanoic acid]			46.0	26.1	7.239	2.9
propanoic acid			74.1	48.6	3.916	1.6
methanol		×	32.0	37.5	3.737	1.5
lactic acid [2-hydroxy-propanoic acid]			90.1	40.0	3.079	1.2
4-ethyl morpholine			115.2	62.6	2.516	1.0
urea			60.1	20.0	2.415	1.0
chloride	×		35.5	0.0	1.465	0.6
4-hydroxy-4-methyl-2-pentanone			116.2	62.0	1.247	0.5
2-butoxyethoxy-ethanol			162.2	59.2	1.130	0.5
4-acetyl morpholine			129.2	55.8	1.092	0.4
1-butanol		×	74.1	64.8	0.937	0.4
2-butoxyethanol			118.2	61.0	0.803	0.3
carbon disulfide	×	×	76.1	15.8	0.785	0.3
octanoic acid			144.2	66.6	0.665	0.3
zinc	×		65.4	0.0	0.650	0.3
N,N-dimethylformamide [N,N-dimethyl formic acid amide]			73.1	49.3	0.608	0.2
total protein			3,206.3	53.0	0.600	0.2
hexanoic acid			116.2	62.0	0.582	0.2
isocitric acid [1-hydroxy-1,2,3-propanetricarboxylic acid]			192.1	37.5	0.576	0.2
dibutyl amine			129.2	74.3	0.566	0.2
potassium	×		39.1	0.0	0.542	0.2
constituents totaling less than 5%					*9.546*	*3.8*
nitrite	×		*46.0*	*0.0*	*0.517*	*0.2*
2-ethoxyethanol		×	*90.1*	*53.3*	*0.504*	*0.2*
acetone [2-propanone]		×	*58.1*	*62.0*	*0.348*	*0.1*
magnesium	×		*24.3*	*0.0*	*0.282*	*0.1*
phenol		×	*94.1*	*76.6*	*0.204*	*0.1*
silver	×		*107.9*	*0.0*	*0.200*	*0.1*
acetaldehyde [ethanal]		×	*44.1*	*54.5*	*0.098*	*0.0*
cyclohexanone		×	*98.1*	*73.4*	*0.089*	*0.0*
nickel	×		*58.7*	*0.0*	*0.087*	*0.0*
acetophenone		×	*120.2*	*80.0*	*0.083*	*0.0*
calcium	×		*40.1*	*0.0*	*0.060*	*0.0*
sulfate	×		*96.1*	*0.0*	*0.052*	*0.0*
methylene chloride [dichloromethane]	×	×	*84.9*	*14.1*	*0.050*	*0.0*
manganese	×		*54.9*	*0.0*	*0.035*	*0.0*
methyl ethyl ketone [2-butanone]		×	*72.1*	*66.6*	*0.023*	*0.0*
iron	×		*55.9*	*0.0*	*0.008*	*0.0*
tetrachloroethene	×	×	*165.8*	*14.5*	*0.005*	*0.0*
copper	×		*63.6*	*0.0*	*0.004*	*0.0*
isobutyl methyl ketone [4-methyl-2-pentanone]		×	*100.2*	*72.0*	*0.002*	*0.0*
cadmium	×		*112.4*	*0.0*	*0.001*	*0.0*
lead	×		*207.2*	*0.0*	*0.001*	*0.0*
toluene		×	*92.1*	*91.2*	*0.001*	*0.0*
ethyl benzene		×	*106.2*	*90.5*	*trace*	*0.0*
benzene		×	*78.1*	*92.3*	*trace*	*0.0*
chloroform [trichloromethane]	×	×	*119.4*	*10.1*	*trace*	*0.0*
Total					**248.76**	**100**

Table 4.4.6 details the contaminants from the crew shower stream. Depending on the actual cleansing agent employed, actual components in a shower greywater stream may vary. Carter (1998) developed this list based on the International Space Station program. Verostko, *et al.* (1989) and Wydeven and Golub (1990) also provide crew shower greywater models. Sodium coconut acid-n-methyl taurate is the major surfactant component of the cleanser originally planned for International Space Station. If a different cleansing agent is selected, this component would be replaced with the major components of the selected cleanser.

Table 4.4.6 Wastewater Contaminants in Crew Shower Stream

Component	CI	SMAC	MW	Percent Carbon [%C]	Concentration [mg/L]	Percent of Total Contam-inants [%]]
sodium coconut acid-n-methyl taurate			341.0	58.0	449.96	47.6
chloride	×		35.5	0.0	106.54	11.3
sodium			23.0	0.0	106.10	11.2
bicarbonate			61.0	19.7	39.10	4.1
total protein			3,206.3	53.0	36.77	3.9
urea			60.1	20.0	36.15	3.8
acetic acid [ethanoic acid]		×	60.1	40.0	30.11	3.2
propanoic acid			74.1	48.6	30.00	3.2
lactic acid [2-hydroxy-propanoic acid]			90.1	40.0	24.16	2.6
potassium	×		39.1	0.0	17.50	1.9
ammonium	×		18.0	0.0	16.80	1.8
sulfate	×		96.1	0.0	12.33	1.3
constituents totaling less than 5%					*32.39*	*3.4*
ethanol		×	*46.1*	*52.1*	*3.08*	*0.3*
ethylene glycol [1,2-ethandiol]		×	*62.1*	*38.7*	*2.51*	*0.3*
methanol		×	*32.0*	*37.5*	*0.90*	*0.1*
phenol		×	*94.1*	*76.6*	*0.37*	*0.0*
acetone [2-propanone]		×	*58.1*	*62.0*	*0.21*	*0.0*
formaldehyde [methanal]		×	*30.0*	*40.0*	*0.10*	*0.0*
propionaldehyde [propanal]		×	*58.1*	*62.0*	*0.09*	*0.0*
Total					**945.2**	**100**

Table 4.4.7 details the contaminants from the crew hygiene stream derived from hand and oral cleansing operations. Depending on the actual cleansing agent employed, actual components in a hygiene greywater stream may vary. Carter (1998) developed this list based on the International Space Station program. Wydeven and Golub (1990) also provides a crew hygiene greywater model. As in Table 4.4.6, Table 4.4.7 assumes the use of a cleanser based on sodium coconut acid-n-methyl taurate. If a different cleansing agent is selected, this component would be replaced with the major components of the selected cleanser.

Table 4.4.7 Wastewater Contaminants in Crew Hygiene Stream

Component	CI	SMAC	MW	Percent Carbon [%C]	Concentration [mg/L]	Percent of Total Contam-inants [%]
sodium coconut acid-n-methyl taurate			341.0	58.0	638.85	62.8
sodium			23.0	0.0	85.00	8.3
chloride	×		35.5	0.0	76.12	7.5
lactic acid [2-hydroxy-propanoic acid]			90.1	40.0	34.34	3.4
acetic acid [ethanoic acid]		×	60.1	40.0	28.59	2.8
total protein			3,206.3	53.0	25.04	2.5
bicarbonate			61.0	19.7	24.44	2.4
sulfate	×		96.1	0.0	11.09	1.1
formic acid [methanoic acid]			46.0	26.1	11.05	1.1
potassium	×		39.1	0.0	10.78	1.1
propanoic acid			74.1	48.6	9.56	0.9
ethanol		×	46.1	52.1	8.57	0.8
phosphate			95.0	0.0	7.20	0.7
constituents totaling less than 5%					*32.09*	*3.2*
methanol		×	*32.0*	*37.5*	*6.36*	*0.6*
ammonium	×		*18.0*	*0.0*	*5.81*	*0.6*
ethylene glycol [1,2-ethandiol]		×	*62.1*	*38.7*	*1.58*	*0.2*
1-propanol		×	*60.1*	*60.0*	*0.58*	*0.1*
2-propanol		×	*60.1*	*60.0*	*0.26*	*0.0*
phenol		×	*94.1*	*76.6*	*0.16*	*0.0*
dimethyl disulfide	×		*94.2*	*25.5*	*0.13*	*0.0*
acetone [2-propanone]		×	*58.1*	*62.0*	*0.09*	*0.0*
pentane		×	*72.2*	*83.2*	*0.09*	*0.0*
formaldehyde [methanal]		×	*30.0*	*40.0*	*0.07*	*0.0*
propionaldehyde [propanal]		×	*58.1*	*62.0*	*0.05*	*0.0*
1-butanol		×	*74.1*	*64.8*	*0.05*	*0.0*
dimethyl sulfide	×	×	*62.1*	*38.7*	*0.05*	*0.0*
carbon disulfide	×	×	*76.1*	*15.8*	*0.02*	*0.0*
Total					**1,018.0**	**100**

Table 4.4.8 lists the composition of unprocessed urine as derived from the human metabolic process. The reference is Putnam (1971).

Table 4.4.8 Wastewater Contaminants in Crew Urine Stream

Component	CI	SMAC	MW	Percent Carbon [%C]	Concentration [mg/L]	Percent of Total Contam-inants [%]
urea			60.1	20.0	13,400	36.2
sodium chloride	×		58.4	0.0	8,001	21.6
potassium sulfate	×		174.3	0.0	2,632	7.1
potassium chloride	×		74.6	0.0	1,641	4.4
creatinine			113.1	42.5	1,504	4.1
ammonium hippurate	×		196.2	55.1	1,250	3.4
magnesium sulfate	×		120.4	0.0	783	2.1
ammonium nitrate	×		80.0	0.0	756	2.0
ammonium glucuronate	×		211.2	34.1	663	1.8
potassium bicarbonate	×		100.1	12.0	661	1.8
ammonium urate	×		185.1	32.4	518	1.4
ammonium lactate	×		107.1	33.6	394	1.1
uropepsin (as tyrosine)			181.2	59.7	381	1.0
creatine			131.1	36.6	373	1.0
glycine			75.1	32.0	315	0.9
phenol		×	94.1	76.6	292	0.8
ammonium L-glutamate	×		164.2	36.3	246	0.7
potassium phosphate	×		212.3	0.0	234	0.6
histidine			155.2	46.4	233	0.6
androsterone			290.4	78.6	174	0.5
1-methylhistidine			169.2	49.7	173	0.5
glucose			180.2	40.0	156	0.4
imidazole			68.1	52.9	143	0.4
magnesium carbonate	×		84.3	14.2	143	0.4
taurine [2-aminoethanesulfonic acid]			125.1	19.2	138	0.4
constituents totaling less than 5%					*1,487*	*4.0*
ammonium aspartate	×		*150.1*	*32.0*	*135*	*0.4*
ammonium formate	×		*63.1*	*19.0*	*88*	*0.2*
calcium phosphate	×		*310.2*	*0.0*	*62*	*0.2*
ammonium pyruvate	×		*105.1*	*34.3*	*44*	*0.1*
ammonium oxalate	×		*124.1*	*19.4*	*37*	*0.1*
Total					**37,057**	**100**

Table 4.4.9 lists the anticipated contaminants from the latent condensate derived from experimental animals. Carter (1998) developed this list based on the International Space Station program.

Table 4.4.9 Wastewater Contaminants in Animal Latent Condensate

Component	CI	SMAC	MW	Percent Carbon [%C]	Concentration [mg/L]	Percent of Total Contam-inants [%]
ammonium	×		18.0	0.0	581.88	81.9
acetic acid [ethanoic acid]		×	60.1	40.0	33.58	4.7
2-propanol		×	60.1	60.0	14.76	2.1
acetone [2-propanone]		×	58.1	62.0	14.69	2.1
phosphate			95.0	0.0	12.09	1.7
glycerol [1,2,3-propanetriol]			92.1	39.1	11.23	1.6
total protein			3,206.3	53.0	8.81	1.2
constituents totaling less than 5%					*16.36*	*2.3*
potassium	×		*39.1*	*0.0*	*5.07*	*0.7*
ethylene glycol [1,2-ethandiol]		×	*62.1*	*38.7*	*4.18*	*0.6*
sulfate	×		*96.1*	*0.0*	*1.47*	*0.2*
methanol		×	*32.0*	*37.5*	*1.25*	*0.2*
nitrate	×		*62.0*	*0.0*	*0.87*	*0.1*
chloride	×		*35.5*	*0.0*	*0.74*	*0.1*
calcium	×		*40.1*	*0.0*	*0.74*	*0.1*
2-butanol		×	*74.1*	*64.8*	*0.60*	*0.1*
magnesium	×		*24.3*	*0.0*	*0.56*	*0.1*
barium	×		*137.3*	*0.0*	*0.53*	*0.1*
zinc	×		*65.4*	*0.0*	*0.41*	*0.1*
acetaldehyde [ethanal]		×	*44.1*	*54.5*	*0.33*	*0.0*
formaldehyde [methanal]		×	*30.0*	*40.0*	*0.12*	*0.0*
nickel	×		*58.7*	*0.0*	*0.08*	*0.0*
copper	×		*63.6*	*0.0*	*0.07*	*0.0*
phenol		×	*94.1*	*76.6*	*0.04*	*0.0*
arsenic	×		*74.9*	*0.0*	*0.03*	*0.0*
iron	×		*55.9*	*0.0*	*0.02*	*0.0*
silver	×		*107.9*	*0.0*	*0.01*	*0.0*
manganese	×		*54.9*	*0.0*	*0.01*	*0.0*
Total					**710.55**	**100**

4.4.3 WASTEWATER AND INTERMEDIATE WATER SYSTEM SOLUTION FORMULATIONS FOR TESTING

Formulations for standardized wastewater solutions for developmental hardware are presented in Verostko and Carrier (2006). This document presents projected input wastewater streams from the crew cabin for a transit vehicle and an early planetary base. The concentrations and volumes for the transit mission wastewater stream originate in literature describing wastewater for International Space Station. The wastewater volumes for the early planetary base originate from flowrates measured during the Advanced Water Recovery System test. These formulations provide researchers with two different feed wastewater streams for testing developmental water processing hardware. For completeness, both streams should be considered. In addition to wastewater streams, formulations are also presented that detail product streams from the biological water processor, a reverse osmosis system, and the air evaporation subsystem, respectively, to provide representative pre-processed input streams for downstream hardware. These formulations of hardware product streams are based upon data taken at Johnson Space Center during an Integrated Advanced Water Recovery Systems test. The tested configuration included a biological water processor coupled with a reverse osmosis system. The biological water processor included a packed-bed denitrification reactor and a tubular nitrification reactor. An air evaporation subsystem dewatered brine from the reverse osmosis system. Though not represented in the data below, the dewatered brine and reverse-osmosis-system permeate were post-processed during testing with a mixed-media ion exchange bed and a series of ultraviolet-light lamps. Because water quality from actual water processing hardware may vary, nominal and worst-case formulations are listed for both the reverse osmosis permeate and the air evaporation subsystem condensate. The biological water processor effluent is an appropriate feed stream for developmental secondary processors, while the reverse osmosis permeate and the air evaporation subsystem condensate formulations provide appropriate feed streams for developmental post-processors.

5 LIFE SUPPORT EXTERNAL INTERFACE ASSUMPTIONS AND VALUES

5.1 EXTRAVEHICULAR ACTIVITY SUPPORT EXTERNAL INTERFACE [104]

Extravehicular activity (EVA) for planetary exploration missions will exhibit significant differences from current EVA in low-Earth orbit. On a planetary surface, the presence of gravity raises the importance of suit mass, so planetary surface space suits must be much lighter than current systems. Such new space suits must also be designed for walking, picking up surface samples, hammering, etc., to accommodate field geology and similar activities necessary for planetary exploration. The current space suit, or extravehicular mobility unit (EMU), does not have these attributes. It has a mass on the order of 135 kg and is designed for weightless mobility using foot restraints. Table 5.1.1 presents local accelerations due to gravity for planetary bodies and Table 5.1.2 presents historical EMU masses. Finally, Table 5.1.3 presents the weight [105] of an average 70 kg crewmember plus historical and current EMU designs under a variety of gravitational conditions. As noted, the current EMU, if not reduced in mass for Mars, would burden a crewmember with a weight 12 % greater than the weight of a nominal, unencumbered crewmember under terrestrial gravity.

- ***Note: The analysis here is not meant to suggest that a historical Apollo EMU or the current Shuttle Program EMU will be used for operations on the surface of Luna or Mars, but rather to compare the effects of suits with similar mass. The current Shuttle Program EMU is inappropriate for surface operations, while the historical Apollo EMU has many limitations and would be inappropriate for Martian surface operations.***

Table 5.1.1 Local Accelerations Due to Gravity

Locale	Mean Acceleration due to Gravity [m/s²]	Fractional Gravity compared to Earth Normal	Reference
Earth	9.807	1.000	Weast and Astle (1979)
Luna	1.620	0.165	
Mars	3.740	0.381	

[104] This section on advanced extravehicular activities is from Rouen (2001).

[105] Weight, a force, is defined as the mass of an object [kg], which is invariant with locale, multiplied by the local acceleration due to gravity [m/s²]. More specifically, weight is the force with which a planet pulls a mass towards its surface and, therefore, the "on back weight" experienced by a crewmember carrying something on the surface in that gravity field.

Table 5.1.2 Historical Extravehicular Activity Masses

Item	Mass [kg]
Nominal Human Being	70 (1)
Apollo Program Spacesuit, A7L [106]	83.0 (2)
Apollo Program Spacesuit, A7LB [107]	90.7 (3)
Shuttle/ISS Program Spacesuit	135 (4)

References

(1) See Section 3.3.3
(2) NASA (1969)
(3) Rouen (2002)
(4) Rouen (2001)

Table 5.1.3 Weights of Historical Spacesuits Under Gravitational Loadings

Locale and Loading	Total Mass [kg]	Weight for Human Alone [N]	Weight for Human Plus Space Suit [N]	Percentage of Unen-cumbered, Earth-Normal Weight [%]
Earth	70.0	686		100
Luna	70.0	113		16.5
Lunar Surface with Apollo A7L EMU	153.0		248	36.1
Lunar Surface with Apollo A7LB EMU	160.7		260	37.9
Lunar Surface with Shuttle EMU	205		332	48.4
Mars	70.0	262		38.2
Martian Surface with Apollo A7L EMU	153.0		572	83.4
Martian Surface with Apollo A7LB EMU	160.7		601	87.5
Martian Surface with Shuttle EMU	205		767	112

The entire EVA system, including airlocks, spacesuits, tools, and vehicle interfaces, must also be designed to minimize the mission launch mass. Thus, technology development is required. The final design solution depends upon the mission architecture as well as the success of development efforts. Several scenarios are described below that represent the best available assumptions with regard to EVA for planetary exploration missions.

5.1.1 OPERATIONS DURING TRANSIT TO MARS

On a Mars transit vehicle, EVA would likely be reserved for contingency only. If EVA from the transit vehicle is minimal, then the transit vehicle airlock system should be as lightweight as possible and intrude into the crew habitat as minimally as possible. Solutions that use an existing volume within the cabin that can be isolated and depressurized or a fabric, fold-up airlock stowed externally to the outer cabin wall are some possible minimum impact solutions to provide contingency EVA capability. In an event, current EVA protocol requires at least two crewmembers at any time, so the minimum airlock should accommodate at least two crewmembers at a time. Thus, the minimum airlock internal volume is about 3.7 m^3. This corresponds to the volume of the current Shuttle airlock.

[106] The value here corresponds to the Apollo A7L extravehicular mobility unit and a –6 portable life support system and associated equipment. Apollo 11 used this configuration on the lunar surface. The EVA surface duration per sortie was less than 8 hours in this configuration.

[107] The value here corresponds to the Apollo A7LB extravehicular mobility unit and a –7 portable life support system and associated equipment. The later Apollo missions used this configuration on the lunar surface. The EVA surface duration per sortie was increased to 8 hours in this configuration.

5.1.2 MARTIAN SURFACE OPERATIONS

Because the gravity on Mars is about twice that of Luna and about a third of that on Earth, the overall mass of a Mars spacesuit is extremely critical. A likely mission design to mitigate this problem is to reduce the standard EVA duration to 4 hours and plan to recharge the spacesuit consumables at midday. Thus, to maintain the same time outside the vehicle during exploration, two 4-hour, or "half-day," EVA sorties per workday could replace the more traditional 8-hour EVA sortie. Assuming five workdays per week allows 520 half-day EVA sorties of two crewmembers per year without any allowance for holidays. This is also the expected number of airlock cycles per year. Each EVA sortie normally requires at least two crewmembers outside.

One method of reducing EVA consumables is to use a radiator to reject thermal loads from the spacesuit backpack rather than rely solely on consuming water to reject thermal loads, as is the current practice in low-Earth orbit. This could reduce cooling water usage to 0.19 kg/h from 0.57 kg/h, which is a typical value when a radiator is not used. The calculation here assumes a human metabolic rate of 1.06 MJ/h (295 W). Water, which remains within the spacesuit, also provides the thermal working fluid to transport heat from the astronaut's skin to heat rejection equipment in the portable life support system (PLSS).

Another concept, which would completely eliminate loss of water to the environment for cooling, is a cryogenic spacesuit backpack. The cryogenic spacesuit backpack rejects thermal loads both to the environment, via a radiator, and to vaporize cryogenically-stored oxygen for metabolic consumption. As above, water still provides the heat transport working fluid.

Oxygen usage and losses during EVA depend on the technologies employed in the PLSS. If a completely closed-loop system is used, oxygen is only consumed by metabolic activity and leakage. Under such conditions, oxygen usage is 0.3 kg per 4-hour EVA sortie, or 0.076 kg/h. If carbon dioxide generated while on EVA is stored by the PLSS and recycled once the crewmembers return to the vehicle actual oxygen loss is associated only with leakage. Oxygen leakage alone accounts for a loss rate of 0.02 kg per 4-hour EVA sortie, or 0.005 kg/h. If the spacesuit PLSS employs a swing bed carbon dioxide removal technology to reject carbon dioxide and water to the Martian environment, then some additional oxygen is lost as a sweep gas to aid the bed's operation. In this case, oxygen loss rates are 0.6 kg per 4-hour EVA sortie, or 0.15 kg/h. If cryogenic oxygen is used for thermal control as well as breathing, the overall oxygen usage rates are 4.0 kg per 4-hour EVA sortie, or 1.0 kg/h.

Normally flight rules require two exits to provide redundant means to enter and egress a vehicle. If pressurized rovers are used, one exit would be dedicated to docking rovers while an airlock would support on-foot EVA operations. As exits are only useful if coupled with a corresponding airlock, the contingency airlock for a secondary exit when another pressurized vehicle is not docked is often to depressurize the entire vehicle cabin.

Although the hatch size increases in an environment with gravity, the required airlock volume remains constant. A two-crewmember airlock has an empty volume of 4.25 m^3. During use, the free gas volume within the airlock is 3.7 m^3 and two suited crewmembers fill the remaining volume. Though not generally acceptable under current rules, a single person airlock has an empty volume of 1.02 m^3 and a free gas volume of roughly 0.89 m^3. About 10% of the free gas within the airlock is lost to space and not recovered by the airlock compression pump during depressurization. These losses could be reduced to 5 % at the expense of additional time and power consumption for the airlock pump. Other advanced concepts, however, may reduce the gas losses without corresponding time and power penalties.

Table 5.1.4 summarizes the estimates above for EVA operations on the surface of Mars. All values are provided by Rouen (2001). Losses in Table 5.1.4 denote mass that leaves the pressurized volume of the spacesuit and, therefore, does not return to the vehicle at the end of EVA operations. Consumption in Table 5.1.5 denotes usage of a commodity by the crewmember regardless of whether that commodity leaves the pressurized spacesuit volume or is retained within that volume and later recycled. McBarron, *et al.* (1993) provide overall values describing the metabolic loads and inputs for an EVA crewmember assuming an average metabolic rate of 1,055 kJ/CM-h (293 W) and a respiratory quotient of 0.90. See Table 5.1.5.

Table 5.1.4 Summary of Extravehicular Activity Values for Mars Surface Operations

Value	Units	low	nominal	high	Reference
Human Metabolic Rate During EVA	MJ /CM-h		1.06		Rouen (2001)
	W/CM		295		
EVA Crewmember Hours per Week	CM-h /wk		80	80	
EVA Sorties [108] per Week	Sorties /wk		5 [109] or 10 [110]	5 [109] or 10 [110]	
Cooling Water Losses	kg /CM-h	0	0.19	0.57	
Oxygen Losses	kg /CM-h	0.005 to 0.076	0.15	1.0	
Airlock Volume	m³	1.02	4.25		
Airlock Free-Gas Volume	m³	0.89	3.7		
Airlock Cycles per Week	Cycles /wk	0	5 [109] or 10 [110]	5 [109] or 10 [110]	
Airlock Gas Losses per Cycle as a Percentage of Airlock Gas Volume [111]	%	5	10	10	

Table 5.1.5 Extravehicular Activity Metabolic Loads

Parameter	Units	Rate
Oxygen Consumption	kg/CM-h	0.075 (1)
Potable Water Consumption [112]	kg/CM-h	0.24 (1, 2)
Food Energy Consumption [113]	MJ/CM-h	1.062 (3)
Carbon Dioxide Production	kg/CM-h	0.093 (1)
Respiration and Perspiration Water Production	kg/CM-h	TBD
Urine Production	kg/CM-h	TBD

References

(1) McBarron, *et al.* (1993); metabolic rate of 293 W/CM and a respiratory quotient of 0.9.

(2) MSIS (1995); a maximum value.

(3) Rouen (2001)

5.1.3 LUNAR SURFACE OPERATIONS

Future EVA scenarios on the lunar surface are likely to be similar to those described above for Mars because lunar surface exploration is often cited as a precursor to Martian surface exploration missions. However, due to lower gravity on Luna, it is easier to extend the EVA sorties to 8 hours, thus saving time and airlock cycle gas losses. However, radiant heat rejection would be a greater challenge during the lunar day.

---

108 Each EVA sortie assumes two crewmembers.

109 Assuming 8-hour EVA sorties.

110 Assuming 4-hour, or "half day" EVA sorties.

111 As given, these values are as a percentage of the mass of gas occupying the free airlock volume when depressurization begins.

112 For EVA sorties longer than 3 hours.

113 This is the total energy expended, and thus consumed, per crewmember per hour of extravehicular activity.

5.2 FOOD EXTERNAL INTERFACE

Food, though historically omitted from life support analysis, has significant impacts on closure and the cost of crew support. In particular, food, if grown on-site, can regenerate some or all of the crew's air and water. If more than about 25% of the food, by dry mass, is produced locally, all the required water can be regenerated by the same process. If approximately 50% or more of the food, by dry mass, is produced on site, all the required air can be regenerated by the same process (Drysdale, *et al.*, 1997). The former value depends on the crop and growth conditions. The latter number, however, depends on the cropping scenario and the overall harvest index.

5.2.1 PHYSICAL PARAMETERS FOR HISTORICAL FOOD FLIGHT SYSTEMS

The crew food energy requirement will depend on the crew themselves, their lean body mass in particular, and the amount of physical work they perform. Extravehicular activity (EVA), for example, requires additional food energy compared with crews conducting only intravehicular activities (IVA) because more physical work is typically associated with an EVA. Unless specified otherwise, this document assumes an average body mass of 70 kg, and an intravehicular metabolic requirement of 11.82 MJ/CM-d, which are consistent with ALS RD (2003) and derived from NASA (1991).

The mass of food required depends heavily on the lipid content and the degree of hydration. A 30 % lipid content, by metabolic energy, is generally recommended though much lower levels of lipids have been suggested by some sources. Degree of hydration is largely a function of the type of food, and the method of processing and storage. Fresh foods can have as much as 99 % water content, by mass, while dehydrated foods have as little as 3 % moisture.

Food quality is not specifically discussed here, because this topic is addressed when the Food Subsystem is designed. However, food quality can have a tremendous impact on crew morale and the success of a long-duration mission. The mass of food also depends on food quality. For example, a greater mass of protein is required if it is of inferior quality. Digestibility will also vary, being lowest for vegetarian diets. As noted above, these factors are currently beyond the scope of this discussion.

Besides the mass of food itself, food requires packaging and/or appropriate containment to protect it from degradation and contamination. Packaging includes wrapping and/or boxes around the food itself, such as for individual servings. Appropriate containment describes stowage, such as food lockers, provision of a suitable atmosphere, temperature, and other environmental conditions, such as freezers for some foods, and secondary structure to house the stowage and environmentally conditioned chambers. Section 3.2.3 provides estimates for supporting secondary structure with the Food Subsystem. Analysis of Table 5.2.1, which presents estimates of associated food packaging masses from historical systems, indicates that an additional ~15 % mass penalty, based on fresh food mass, is appropriate for individually packaged meals. Note that the values presented in Table 5.2.1 are historical or predicted averages for the indicated programs and, therefore, may or may not provide 11.82 MJ/CM-d of metabolic energy.

Table 5.2.1 Historical and Near-Term Food Subsystem Masses

Parameter	Mass [kg/CM-d]	Volume [m³/CM-d]	Comments	Water Content [%]
IVA Food, dw	0.67 (1)		A Reference Value	0 (1)
Space Transportation Food System				
STS Food [114]	0.66 (2)		Food Dehydrated, 11.82 MJ/CM-d	0 (2)
	1.147 (2)		Food As-Shipped, No Packaging, 11.82 MJ/CM-d	42 (2)
	0.26 (2)		Packaging Alone (clean)	
	0.35 (2)		Container Mass (ISS "Pantry-style storage") without secondary structure [115]	
	1.76 (2)	0.0048 (2)	Food As-Shipped, Packaged (ISS "Pantry-style storage"), and within a Container	42 (2)
International Space Station Food Systems				
Phase II [116]	1.83 (3)	TBD	Food As-Shipped, Packaged with Food Container	TBD
Phase III [117]	1.955		Food As-Shipped, No Packaging	66
	0.345		Packaging Alone	
	2.3	0.006570	Food As-Consumed, Packaged	

References

Information from Bourland (1998) or Vodovotz (1999), except as noted.

(1) MSIS (1995), Section 7.2.2.2.3

(2) Levri (2002)

(3) Perchonok, *et al.* (2002)

For a food system based on the Shuttle Training Menu, as detailed above, Levri (2002) lists the properties of the rehydration apparatus and conduction oven collectively as 36.3 kg occupying 0.094 m³ based on the Shuttle galley. During use, the rehydration apparatus consumes up to 0.540 kW to heat water. The conduction oven, when operational, consumes up to 0.360 kW for heaters and 0.060 kW for fans. Thus, the maximum total power load for the galley is 0.960 kW during operation.

Perchonok, *et al.* (2002) reports that a loaded ISS food container for Phase II averages 5.5 kg each and contains nine meals plus snacks. This is equivalent to a single day's food for three ISS crewmembers. This is equivalent, on average, to 0.611 kg/meal, assuming snacks are extensions of the standard meals, or 1.83 kg/CM-d. Individual food container masses vary according to individual crew entrée preferences and nutritional requirements, and the containers themselves are placed in racks, incurring a secondary structure penalty not included in the masses above.

---

114 Space Transportation System (STS) food systems are provided for reference only. They do not meet nutritional requirements for long-duration space flight. (For example, while this diet meets all minimum nutritional requirements, it exceeds the limit for sodium and iron for a weightless diet.) These food systems do not use any refrigeration.

115 Historically, Bourland (1999) reports an empty locker for food aboard Shuttle has a mass of 6.4 kg. Filled, this locker holds up to 42 individual meals (Perchonok, *et al.*, 2002). The overall locker mass, when filled, is 24.5 kg (Bourland, 1999). This is equivalent to 0.583 kg/meal, or 1.75 kg/CM-d. The Shuttle food system is shelf-stable without any frozen components. Note that assessments from Levri (2002) assume ISS "Pantry-style storage" and not Shuttle lockers.

116 International Space Station (ISS) Assembly Phase food system. This system is shelf stable.

117 International Space Station (ISS) Assembly Complete food system. This food is provided as 50% frozen products. For a 540 CM-d (six crew for 90 d) food supply, 1.84 m³ of refrigerated storage is required.

5.2.2 PHYSICAL PARAMETERS OF REFRIGERATION EQUIPMENT

Table 5.2.2 presents characteristics for the ISS refrigerator / freezer technology. These units are designed, but ISS Program deferred launching them along with the planned frozen food system. The internal volume and internal load apply to the internal refrigerator or freezer cargo capacity within a single unit assigned to a single rack, while the other parameters generally describe the exterior properties of the overall unit.

Each ISS refrigerator / freezer fits within one ISS rack and has four cold volume compartments, each with a dedicated thermoelectric thermal control system. An ISS refrigerator / freezer may operate in one of three modes, depending on the thermostat settings for the internal compartments. In the freezer mode all four compartments operate as freezers, in the refrigerator mode all four compartments operate as refrigerators, and in the refrigerator / freezer mode two compartments operate as refrigerators while the other two compartments operate as freezers. The overall system thermodynamic coefficient of performance (COP_S) for the ISS refrigerator / freezer in freezer mode is 0.36 (Ewert, 2002a). Waste heat is rejected to the internal thermal control loops. The ISS unit has an operational lifetime of 10 y, with servicing provided on the ground once a year.

Table 5.2.2 International Space Station Refrigerator / Freezer Properties

	Units	Freezer Mode	Refrigerator / Freezer Mode
Unit Mass	kg	321.0 (1)	321.0 (1)
Secondary Structure Mass	kg	91 (2)	91 (2)
Volume, Including Rack	m³	2.00 (3)	2.00 (3)
Volume, Without Rack	m³	1.16 (3)	1.16 (3)
Power	kW	0.268 (4)	0.205 (4)
Thermal Control	kW	0.297 (4)	0.228 (4)
Crewtime	CM-h/y	0 (1)	0 (1)
Logistics	kg/y	321.0 (1)	321.0 (1)
Internal Load	kg	295 (1)	295 (1)
Internal Volume	m³	0.614 (1)	0.614 (1) [118]

References

(1) Toups, *et al.* (2001)
(2) Shepherd (2001)
(3) Vonau (2002)
(4) Winter, *et al.* (2001)

More generally, Table 5.2.3 lists properties for frozen food storage per frozen-food-mass (ffm) basis. The nominal and low values reflect advanced or anticipated technologies, while the high values are based on ISS technology. Vapor compression and Stirling refrigeration technologies are more efficient, generally exhibiting higher COP_S values than thermoelectric approaches. However, these advanced technologies are at low technology readiness and require further development to meet spaceflight requirements, especially with respect to weightlessness and acoustics (Ewert, 2002a).

As described in Ewert (2002b) and presented in Equation 5.2-1, the specific power consumption for a cooled volume within a cabinet, $\hat{W}_{RF}$ [kW/kg $_{ffm}$], may be expressed as an empirical function of two system-level values, the composite thermal resistance, R_S [m²•K/kW], and COP_S [kW $_{electrical}$/kW $_{thermal}$]. R_S characterizes the overall resistance to heat transfer to or from a cooled volume, such as a refrigerator or freezer, through the cabinet wall accounting for insulation, door seals, and any other pathways for heat transfer. COP_S is the system-level coefficient of performance defined as the net heat removed from the cooled volume divided by the total electrical power consumed by the refrigerator or freezer unit including the heat pump cycle and all supporting equipment. The assumed frozen food density within the cooled volume, including packaging and gaps, is 480 kg/m³. The assumed air temperature within the cooled volume is – 22 °C, while the ambient external cabin temperature is 23 °C.

[118] In refrigerator / freezer mode, half of the internal cold volume is a refrigerator while the other half is a freezer.

$$\hat{W}_{RF} = 1.028\left(\frac{1}{R_S}\right)\left(\frac{1}{COP_S}\right)$$

Equation 5.2-1

Table 5.2.3 Frozen Food Storage on a Property per Frozen-Food-Mass Basis

Characteristic	Units	Assumptions low	Assumptions nominal	Assumptions high
$1/COP_S$	$\frac{kW_{electrical}}{kW_{thermal}}$	0.5 (1)	1.0 (1)	9.2 (1)
$1/R_S$	$kW/m^2 \bullet K \times 10^{-3}$	0.28 (1)	0.32 (1)	0.32 (1)
Mass [119]	kg		220 (4)	321 (2)
	kg/kg_{ffm}		0.75	1.09
External Volume, Including Rack	m^3		TBD	2.00 (3)
	$m^3/kg_{ffm} \times 10^{-3}$			6.78
External Volume, Excluding Rack	m^3		1.16 (4)	
	$m^3/kg_{ffm} \times 10^{-3}$		3.93	
Power	kW	0.048 (1)	0.096 (1)	0.268 (1)
	$kW/kg_{ffm} \times 10^{-3}$	0.16	0.33	0.91
Thermal Control	kW	0.053 (1)	0.106 (1)	0.297 (1)
	$kW/kg_{ffm} \times 10^{-3}$	0.18	0.36	1.01
Crewtime	CM-h/y	0.0	0.0	0.0
	$CM\text{-}h/(y \bullet kg_{ffm})$	0.0	0.0	0.0
Logistics	kg/y	0.0	0.0	321 (2)
	$kg/(y \bullet kg_{ffm})$	0.0	0.0	1.09

References

(1) Ewert (2002a)
(2) Toups, *et al.* (2001)
(3) Rodriguez and England (1998)
(4) Vonau (2002)

5.2.3 CREWTIME FOR THE FOOD SUBSYSTEM

Overall crewtime requirements in the galley depend on the form in which food is shipped and its preparation requirements. Crewtime required for food preparation during Space Transportation System (STS, or Shuttle) missions is 45 – 90 minutes per day for a crew of up to six (NASA, 1996). This approach uses individually packaged servings. If food preparation requires more than heating and/or re-hydration, then the additional preparation complexity increases crewtime for preparation compared with current systems. However, more involved preparation may allow for higher quality food.

Hunter (1999) provides another estimate of crewtime for food preparation. Hunter's model assumes that each crewmember eats ten different food dishes per day. For a crew of six, each dish prepared using ingredients provided by bioregenerative methods requires 15 to 45 minutes each, while each dish taken from resupplied stocks requires an average of 6 minutes to prepare based on NASA (1996). Assuming meals prepared using bioregenerative methods each require 30 minutes, on average, to prepare, a diet based on crops grown on-site would require 5.0 CM-h/d, or 0.83 CM-h/CM-d, assuming a crew of six. Daily meals prepared completely from resupplied foods would require 1.0 CM-h/d, or 0.17 CM-h/CM-d. Assuming five dishes are prepared from crops grown on site and five dishes are prepared from resupplied stocks, daily meal preparation time would be 3.0 CM-h/d or 0.50 CM-h/CM-d.

Kloeris, *et al.* (1998) report meal preparation time during the Lunar Mars Life Support Test Program (LMLSTP) Phase III test while using the 10-day BIO-Plex menu averaged 4.6 CM-h/d.

There will also be crewtime requirements to process the crops into edible food ingredients. These times, though expected to be significant, have not been calculated to date.

[119] Including the freezer mass and rack but excluding the secondary structure.

5.2.4 FOOD SUBSYSTEM WASTE GENERATION

Wastage will depend on the type of food and the type of preparation, but can be quite large. For example, during the 10-day BIO-Plex menu test conducted during the LMLSTP Phase III, total waste, including preparation, plate waste, and unused, leftover food, was 42% (Kloeris, *et al.*, 1998). Typically much lower values are assumed for prepackaged food systems. Wastage occurs both due to food adhering to packaging and due to plate wastage. Waste model values are noted below and in Section 4.3.4.7 for both historical pre-packaged food systems and projected food systems based on crops from bioregenerative life support systems.

5.2.5 OVERALL FOOD SUBSYSTEM PARAMETERS

Typical values from the literature for food-related masses are shown in Table 5.2.4. However, the food mass values here do not reflect as great a range as is associated with the metabolic gas exchange values in Table 4.1.1. The listed food masses in Table 5.2.4 are "as shipped" and before addition of any hydration fluid and reflect historical pre-packaged food systems, although the upper value for crewtime is associated with a Food Subsystem using crop products derived from a biomass production chamber.

Table 5.2.4 Food Quantity and Packaging

		Assumptions		
Parameter	**Units**	**lower**	**nominal**	**upper**
IVA Food, dry mass [120]	kg/CM-d	0.54 (8)	0.617 (1)	0.66 (2)
IVA Human Metabolic Water Production	kg/CM-d		0.345 (1)	
IVA Energy	MJ/CM-d		11.82 (1)	
IVA Potable Water Consumption	kg/CM-d		3.909 (3)	
EVA Food, dry mass, added [121]	kg/CM-h		+ 0.029 (4)	
EVA Metabolic Water Production added [121]	kg/CM-h		+ 0.016 (4)	
EVA Energy added [121]	MJ/CM-h		+ 0.570 (5)	
EVA Potable Water Consumption	kg/CM-h			0.24 (1)
Packaging [122]	kg/kg		+ 15 %	
Crewtime	CM-h/d	1 – 1.5 (6)	1.5 (6)	4.6+ (7) [123]

References

(1) NASA (1991)
(2) Levri (2002)
(3) Perchonok (2001) and NASA (1991)
(4) Derived from McBarron, *et al.* (1993); metabolic rate of 293 W/CM and a respiratory quotient of 0.9.
(5) Rouen (2001)
(6) NASA (1996)
(7) Kloeris, *et al.* (1998)
(8) ALS RD (1998)

5.2.6 FOOD SUBSYSTEM BASED ON BULK PACKAGING [124]

French and Perchonok (2006) recently developed 10-day menu using a bulk commodity supply approach that may serve as a basis for estimates for supplying food via such an approach. Specifically, this approach endeavors to reduce packing mass and storage volume by packing food commodities in bulk. This benefit is offset by increasing crewtime to prepare meals and adding some additional food processing equipment to enable more complicated food preparation processes. This approach also increases overall menu shelf-life by storing food commodities in a form that is inherently more stable, thus assuring better

---

120 On a dry mass (dw) basis.
121 EVA requirements are in addition to any IVA requirements.
122 Packaging accounts for individual food packages only. Secondary structure, lockers, and trays are additional.
123 This value is derived using "ready to use" ingredients and includes no crop processing to develop ingredients. An estimate including crop processing to develop ingredients might be double this value, or ~9 CM-h/d, or more.
124 Unless noted otherwise, all material in this section is derived from French and Perchonok (2006).

food quality for longer-duration missions. Finally, because some commodities cannot be successfully stored in any form, this approach assumes a biomass production facility to provide salad crops, white potatoes, and sweet potatoes. The initial study assumed a 600-day surface mission on Mars, but the format presented below should be applicable to missions of any duration with the most direct benefit derived from those of longer durations. The presentation here is, by necessity, abbreviated and interested readers should consult French and Perchonok (2006) for additional information.

5.2.6.1 COMMODITIES

Table 5.2.5 provides a listing on the ingredients for the 10-day, bulk-commodity menu on a per-crewmember, per-day basis. The "daily menu ingredient mass" is the ingredient mass required by the menu recipes. The "nominal unprocessed ingredient mass" lists the expected ingredient input prior to processing assuming the "nominal yield" value to produce the "daily ingredient mass." When the yield varied, French and Perchonok (2006) also provide different minimum and maximum yield values. The "nominal unprocessed ingredient volume" estimates the corresponding volume for a given ingredient mass assuming the listed "specific volume factor" estimates. More precisely, these values are a specific volume of 1.33×10^{-3} m^3/kg for dry beans, peanuts, rice, soybean, wheat, and liquid resupply items. Specific volume factors of 1.78×10^{-3}, 7.69×10^{-3}, and 7.3×10^{-4} m^3/kg are used for powder, leafy, and granule resupply items, respectively, while a specific volume factor of 2.5×10^{-3} m^3/kg is used for resupply pasta items. Because some ingredients, denoted as salad, sweet potato, or white potato inputs in the "source" column, are derived from a limited biomass production facility, the corresponding volume is not listed implying that these ingredients are used shortly after harvest and occupy no appreciable storage volume beyond that associated with the biomass production facility. Volume for "water" is also omitted because this commodity is drawn from the life support system stores as needed.

Table 5.2.5 Ingredients, Commodity Sources, and Yield Values on a Per-Crewmember Per-Day Basis for 10-Day, Bulk-Commodity Menu

Ingredient	Source	Daily Menu Ingredient Mass [g/CM-d]	Minimum Yield	Nominal Yield	Maximum Yield	Nominal Unprocessed Ingredient Mass [g/CM-d]	Specific Volume Factor [m³/kg]	Nominal Unprocessed Ingredient Volume [m³/CM-d]
allspice	resupply	0.015	100%	100%	100%	0.015	0.00178	2.670×10^{-8}
baking powder	resupply	1.108	100%	100%	100%	1.108	0.00178	1.973×10^{-6}
baking soda	resupply	0.020	100%	100%	100%	0.020	0.00178	3.560×10^{-8}
basil, dried/leaves	resupply	0.363	100%	100%	100%	0.363	0.00769	2.794×10^{-6}
bay leaf, dried	resupply	0.007	100%	100%	100%	0.007	0.00769	5.127×10^{-8}
bell pepper, whole	salad	21.500	40%	45%	50%	47.778	n/a	n/a
black beans, uncooked	dry bean	9.540	100%	100%	100%	9.540	0.00133	1.269×10^{-5}
black pepper	resupply	0.249	100%	100%	100%	0.249	0.00178	4.440×10^{-7}
bouillon cube, beef	resupply	0.600	100%	100%	100%	0.600	0.00073	4.380×10^{-7}
bouillon cube, chicken	resupply	1.508	100%	100%	100%	1.508	0.00073	1.100×10^{-6}
brown rice, uncooked	rice	8.992	100%	100%	100%	8.992	0.00133	1.196×10^{-5}
butter sprinkles	resupply	0.020	100%	100%	100%	0.020	0.00073	1.460×10^{-8}
cabbage, shredded	salad	3.750	85%	90%	95%	4.167	n/a	n/a
carrot, whole	salad	45.957	55%	60%	65%	51.063	n/a	n/a
carrots, grated	salad	7.661	55%	60%	65%	12.769	n/a	n/a
carrots, shredded	salad	8.272	55%	60%	65%	13.786	n/a	n/a
carrots, sliced/chopped	salad	11.437	55%	60%	65%	19.061	n/a	n/a
cayenne pepper	resupply	0.025	100%	100%	100%	0.025	0.00178	4.450×10^{-8}
chili powder	resupply	0.250	100%	100%	100%	0.250	0.00178	4.450×10^{-7}
cilantro, dried	resupply	0.030	100%	100%	100%	0.030	0.00769	2.307×10^{-7}
cinnamon	resupply	0.155	100%	100%	100%	0.155	0.00178	2.759×10^{-7}
cloves, ground	resupply	0.004	100%	100%	100%	0.004	0.00178	7.417×10^{-9}
cocoa powder	resupply	4.938	100%	100%	100%	4.938	0.00178	8.790×10^{-6}
coffee, instant	resupply	0.133	100%	100%	100%	0.133	0.00073	9.733×10^{-8}
coriander, ground	resupply	0.035	100%	100%	100%	0.035	0.00178	6.181×10^{-8}
coriander, seeds	resupply	0.016	100%	100%	100%	0.016	0.00073	1.196×10^{-8}
cornstarch	resupply	1.070	100%	100%	100%	1.070	0.00178	1.905×10^{-6}

Ingredient	Source	Daily Menu Ingredient Mass [g/CM-d]	Minimum Yield	Nominal Yield	Maximum Yield	Nominal Unprocessed Ingredient Mass [g/CM-d]	Specific Volume Factor [m³/kg]	Nominal Unprocessed Ingredient Volume [m³/CM-d]
cumin	resupply	0.284	100%	100%	100%	0.284	0.00178	5.053×10^{-7}
dill weed, dried	resupply	0.091	100%	100%	100%	0.091	0.00769	6.964×10^{-7}
egg, dried/white	resupply	0.233	100%	100%	100%	0.233	0.00178	4.153×10^{-7}
egg, dried/whole	resupply	2.912	100%	100%	100%	2.912	0.00178	5.183×10^{-6}
elbow macaroni, uncooked	resupply	3.150	100%	100%	100%	3.150	0.00250	7.875×10^{-6}
extract, almond	resupply	0.173	100%	100%	100%	0.173	0.00133	2.298×10^{-7}
extract, maple	resupply	0.010	100%	100%	100%	0.010	0.00133	1.293×10^{-8}
extract, vanilla	resupply	3.738	100%	100%	100%	3.738	0.00133	4.971×10^{-6}
garlic, granulated	resupply	0.606	100%	100%	100%	0.606	0.00073	4.421×10^{-7}
garlic, powder	resupply	0.514	100%	100%	100%	0.514	0.00178	9.147×10^{-7}
ginger, dried/ground	resupply	0.078	100%	100%	100%	0.078	0.00178	1.389×10^{-7}
green onion, chopped	salad	11.335	85%	95%	95%	11.932	n/a	n/a
kidney beans, uncooked	dry bean	3.017	100%	100%	100%	3.017	0.00133	4.012×10^{-6}
lemon juice	resupply	0.808	100%	100%	100%	0.808	0.00133	1.075×10^{-6}
lentils, uncooked	dry bean	13.007	100%	100%	100%	13.007	0.00133	1.730×10^{-5}
lettuce	salad	2.815	85%	90%	95%	3.128	n/a	n/a
lime juice	resupply	0.009	100%	100%	100%	0.009	0.00133	1.219×10^{-8}
mustard, ground	resupply	0.273	100%	100%	100%	0.273	0.00178	4.851×10^{-7}
navy beans, uncooked	dry bean	7.313	100%	100%	100%	7.313	0.00133	9.726×10^{-6}
nutmeg, ground	resupply	0.015	100%	100%	100%	0.015	0.00178	2.670×10^{-8}
oil, peanut	peanuts	24.578	30%	35%	40%	70.223	0.00133	9.340×10^{-5}
onion, dried/flakes	resupply	9.173	100%	100%	100%	9.173	0.00769	7.054×10^{-5}
oregano, dried/whole	resupply	0.279	100%	100%	100%	0.279	0.00769	2.147×10^{-6}
paprika	resupply	0.035	100%	100%	100%	0.035	0.00178	6.230×10^{-8}
parsley, dried	resupply	0.294	100%	100%	100%	0.294	0.00769	2.260×10^{-6}
peanut butter	peanuts	11.022	90%	95%	100%	11.602	0.00133	1.543×10^{-5}
peanuts w/o shell	peanuts	0.677	92%	95%	98%	0.713	0.00133	9.481×10^{-7}
pinto beans, uncooked	dry bean	4.962	100%	100%	100%	4.962	0.00133	6.599×10^{-6}
potato, white	white potato	41.933	65%	70%	75%	59.905	n/a	n/a

Ingredient	Source	Daily Menu Ingredient Mass [g/CM-d]	Minimum Yield	Nominal Yield	Maximum Yield	Nominal Unprocessed Ingredient Mass [g/CM-d]	Specific Volume Factor [m³/kg]	Nominal Unprocessed Ingredient Volume [m³/CM-d]
potato, white/peeled	white potato	15.237	60%	65%	70%	23.441	n/a	n/a
potato, white/shredded	white potato	11.067	65%	70%	75%	15.810	n/a	n/a
potato, white/sliced/diced	white potato	2.833	65%	70%	75%	4.048	n/a	n/a
radish	salad	1.068	45%	50%	55%	2.137	n/a	n/a
red pepper flakes	resupply	0.014	100%	100%	100%	0.014	0.00769	1.047×10^{-7}
rosemary, dried	resupply	0.005	100%	100%	100%	0.005	0.00769	4.059×10^{-8}
sage, dried	resupply	0.041	100%	100%	100%	0.041	0.00769	3.161×10^{-7}
salt	resupply	4.790	100%	100%	100%	4.790	0.00073	3.497×10^{-6}
savory, dried	resupply	0.033	100%	100%	100%	0.033	0.00769	2.563×10^{-7}
soy sauce powder	resupply	2.852	100%	100%	100%	2.852	0.00178	5.076×10^{-6}
soybeans, uncooked	soybean	4.750	100%	100%	100%	4.750	0.00133	6.318×10^{-6}
soymilk	soybean	237.862	688%	750%	816%	31.715	0.00133	4.218×10^{-5}
spinach	salad	27.750	85%	90%	95%	30.833	n/a	n/a
starch, instant	resupply	7.908	100%	100%	100%	7.908	0.00178	1.408×10^{-5}
strawberries	salad	28.708	30%	35%	40%	82.024	n/a	n/a
sugar, brown	resupply	0.346	100%	100%	100%	0.346	0.00073	2.523×10^{-7}
sugar, granulated	resupply	63.389	100%	100%	100%	63.389	0.00073	4.627×10^{-5}
sweet potato	sweet potato	46.567	35%	40%	45%	116.417	n/a	n/a
sweet potato, mashed	sweet potato	5.925	35%	40%	45%	14.813	n/a	n/a
sweet potato, sliced	sweet potato	22.667	35%	40%	45%	56.667	n/a	n/a
tarragon, dried	resupply	0.017	100%	100%	100%	0.017	0.00769	1.282×10^{-7}
textured soy protein	soybean	2.575	100%	100%	100%	2.575	0.00133	3.425×10^{-6}
thyme, dried	resupply	0.280	100%	100%	100%	0.280	0.00769	2.153×10^{-6}
tofu, firm	soybean	39.913	367%	400%	433%	9.978	0.00133	1.327×10^{-5}
tofu, soft	soybean	20.513	367%	400%	433%	5.128	0.00133	6.821×10^{-6}
tomato, diced	salad	51.755	40%	45%	50%	115.010	n/a	n/a
tomato, dried	salad	0.373	40%	45%	50%	0.830	n/a	n/a
tomato, paste	salad	1.027	40%	45%	50%	2.281	n/a	n/a
tomato, sauce	salad	85.703	40%	45%	50%	190.450	n/a	n/a
tomato, whole	salad	39.385	40%	45%	50%	87.523	n/a	n/a

Ingredient	Source	Daily Menu Ingredient Mass [g/CM-d]	Minimum Yield	Nominal Yield	Maximum Yield	Nominal Unprocessed Ingredient Mass [g/CM-d]	Specific Volume Factor [m³/kg]	Nominal Unprocessed Ingredient Volume [m³/CM-d]
vinegar	resupply	7.450	100%	100%	100%	7.450	0.00133	9.909×10^{-6}
water	water	317.263	100%	100%	100%	317.263	n/a	n/a
water, cook	water	238.943	100%	100%	100%	238.943	n/a	n/a
water, ice	water	20.737	100%	100%	100%	20.737	n/a	n/a
water, rinse	water	39.500	100%	100%	100%	39.500	n/a	n/a
wheat flour	wheat	59.574	98%	99%	100%	60.176	0.00133	8.003×10^{-5}
white flour	wheat	94.234	67%	72%	77%	130.881	0.00133	1.741×10^{-4}
white pepper	resupply	0.061	100%	100%	100%	0.061	0.00178	1.078×10^{-7}
white rice, uncooked	rice	5.682	110%	115%	120%	4.941	0.00133	6.571×10^{-6}
yeast, dried	resupply	2.663	100%	100%	100%	2.663	0.00073	1.944×10^{-6}
ziti, uncooked	resupply	5.677	100%	100%	100%	5.677	0.00250	1.419×10^{-5}

5.2.6.2 EQUIPMENT

Equipment allows a food commodities to be processed into ingredients and ultimately into palatable and nutritious food entries. The equipment selected and described here addresses one or more necessary functions. These functions are to (1) provide the ingredients required by the 10-day menu, (2) keep ingredients or products viable, or (3) prepare menu items from ingredients. Because corresponding flight hardware is unavailable, the hardware below reflect commercial machines that are believed to be representative in both functionality and size to what might be designed ultimately for flight. French and Perchonok (2006) note that "the listed equipment, though smaller in size, may still be [over-sized] for missions supporting" the number of people associated with projected near-term crews. Table 5.2.6 and Table 5.2.7 list the recommended hardware to support preparation of the 10-day bulk commodity menu from bulk commodities, crops taken from a biomass production chamber, and other foodstuffs supplied to the finished menu listed by French and Perchonok (2006).

Table 5.2.6 Mechanical Processor Characteristics for 10-Day Bulk Commodity Menu

Technology	Manufacturer / Model	Ingredient(s) Produced	Processing Rate	Unit Mass [kg]	Unit Volume [m³]	Unit Power [kW_e]	Duty Cycle
Grind Mill	Brabender /Quadramat Jr.	wheat flour, white flour	5.9 kg/h	69	0.22	0.46	
Dehydrator	L'Equip/528	tomato, dried	n/a	4.54	0.034	0.55	
Concentrator	Armfield/FT18	tomato, paste; tomato, sauce	3 L/h	220	0.54	2.2	
Soymilk / Tofu Maker	SoyaJoy	soymilk	6 kg/h	2.95	0.015	0.8	
		tofu, firm; tofu, soft	n/a				
Oil Press	Skeppsta Maskin AB /Type 20	oil, peanut	4 kg/h	5.9	0.069	0.4	
Refrigerator / Freezer [125]	Sub Zero /700 BC		n/a	86	0.37 [126]	1.725	0.030

[125] French and Perchonok (2006) recommend two refrigerator / freezer units, minimum, to support the 10-day bulk commodity menu.

[126] Internal capacity is 0.141 m³, divided as 0.082 m³ for the refrigerator and 0.059 m³ for the freezer.

Table 5.2.7 Food Preparation Equipment for 10-Day Bulk Commodity Menu

Equipment Name	Unit Mass [kg]	Unit Volume [m³]	Unit Power [kW_e]	Duty Cycle
Baking Dish/Pan	1.50	0.004		
Biscuit Cutter	0.03	0.000		
Blender	6.70	0.015	0.6	
Bowl (Large)	0.44	0.013		
Bowl (Medium)	0.35	0.009		
Bowl (Small)	0.30	0.006		
Breadmaker	6.62	0.026	0.52	
Brillo	0.03	0.000		
Cake Pan	0.19	0.005		
Colander	0.40	0.013		
Convection Oven	174.60	1.080	5.5	
Cookie Sheet	0.33	0.002		
Food Processor #2	6.70	0.020	0.72	
Fork	0.03	0.000		
Hot Pad	0.10	0.000		
Ice Cream Maker	2.75	0.012	0.01	
Juicer	4.33	0.023	0.4	
Knife (Bread)	0.14	0.000		
Knife (Chef)	0.22	0.000		
Knife (Paring)	0.07	0.000		
Loaf Pan	0.16	0.002		
Measuring Cup	0.30	0.001		
Measuring Spoons	0.10	0.000		
Muffin Cups	0.37	0.033		
Pan (Pie)	0.16	0.003		
Pasta Maker	3.05	0.005		
Pot (Large)	3.35	0.023		
Pot (Medium)	2.28	0.014		
Pot (Small)	1.20	0.006		
Potato Masher	0.16	0.002		
Potato Peeler	0.07	0.000		
Pressure Cooker	2.70	0.016		
Range	0.00	0.000	3.35	
Rolling Pin	0.64	0.002		
Saucepan (Large)	2.36	0.014		
Saucepan (Medium)	1.77	0.010		
Saucepan (Small)	1.18	0.006		
Skillet (Large)	1.47	0.018		
Slotted Spoon	0.04	0.001		
Spatula	0.07	0.001		
Spoon, Metal	0.03	0.000		
Spoon, Wooden	0.05	0.000		
Tongs	0.08	0.001		
Tortilla Press	15.50	0.047	1.8	
Whisk	0.13	0.001		
Wire Rack	0.15	0.001		
Total	243.16	1.43	12.9	

5.2.6.3 CREWTIME

Many food external interface activities require additional mechanical inputs beyond what is currently associated with the hardware listed in Section 5.2.6.2. While it may be possible to automate some food preparation activities, historically such complex inputs are provided by human beings. Thus, here, without further analyses, it is assumed that mechanical inputs beyond those provided by the hardware listed above will be fulfilled by the crew. [127]

Per French and Perchonok (2006), crewtime has been classified as either active or passive time. Active time includes those activities that require the full attention of a crewmember, while passive time may not require the full attention of the crewmember but the task does have some level of cognitive impact. French and Perchonok (2006) include estimates of crewtime for the following activities:

- Recipe preparation
- Meal consumption
- Meal cleanup
- Ingredient processing
- Equipment maintenance

5.2.6.3.1 RECIPE PREPARATION, MEAL CONSUMPTION AND MEAL CLEANUP

French and Perchonok (2006) recorded preparation times for each recipe in the 10-day bulk commodity menu. Table 5.2.8 provides a breakdown of active and passive time for each day of the menu. For this study, French and Perchonok (2006) assumed a crew of six. Thus, a smaller crew will require less crewtime than is listed here for this same menu, but food preparation crewtime is not expected to scale linearly as a function of crew size for crews of four to six crewmembers or smaller.

Table 5.2.8 Crewtime Requirements for 10-Day Bulk Commodity Menu

Event	Active Time [min]	Passive Time [min]
Day 1	160	115
Day 2	145	397
Day 3	120	182
Day 4	210	700
Day 5	140	170
Day 6	155	357
Day 7	195	520
Day 8	190	185
Day 9	100	232
Day 10	115	345
Total	1,530	3,203

For this menu, a 30-minute allotment is assumed for meal consumption. Because there are three meals per day scheduled for this 10-day bulk commodity menu, this assumption becomes 90 minutes per crewmember per day. A 10-minute total allotment is assumed to cleanup each meal. Similarly, this assumption becomes 30 minutes per day to accommodate the three-meal schedule.

5.2.6.3.2 INGREDIENT PROCESSING AND EQUIPMENT MAINTENANCE

French and Perchonok (2006) determined crewtime values for each piece of ingredient processing equipment based on the documented throughput capacity of the processing equipment, the mass totals of the associated ingredient(s), Table 5.2.5, the ingredient source nominal yield value, also Table 5.2.5, and estimated times for indirectly associated steps. Table 5.2.6 provides documented throughput capacity

[127] While this is one approach, it may or may not be an optimal approach. Additional testing and analysis of the benefits and costs of using automation versus the crew for various food preparation tasks is most likely necessary before this question can be addressed with any certainty.

values and French and Perchonok (2006) provide the rationale surrounding determination of estimated ingredient processing equipment crewtime values for interested readers.

During long-duration missions, food processing equipment will require maintenance of some kind. It is assumed that an additional 10% of ingredient processing time will be required to perform this function. Table 5.2.9 lists the associated crewtime for each of the processed ingredients per 10-day menu cycle. As with the other work in French and Perchonok (2006), this assessment is assumes a crew of six. [128]

Table 5.2.9 Ingredient Processing Equipment Crewtime Values for Each 10-Day Menu Cycle

Technology	Manufacturer / Model	Associated Ingredient(s)	Crewtime [CM-h] [129]
Grind Mill	C. W. Brabender /Quadramat Jr.	wheat flour white flour	2.0
Dehydrator	L'Equip/528	tomato, dried	8.0
Concentrator	Armfield/FT18	tomato, sauce tomato, paste	1.0
Soymilk /Tofu maker	SoyaJoy	soymilk tofu, soft tofu, firm	8.1
Oil Press	Skeppsta Maskin AB /Type 20	oil, peanut	1.1
Subtotal			20.0
Maintenance (10% of Subtotal)			2.0
Total			22.0

5.2.6.4 NUTRITION

French and Perchonok (2006) analyzed their 10-day menu using bulk-packaged foods for nutrient content using the Nutritionist Five® database. Table 5.2.10 presents these results along with the corresponding Recommended Dietary Allowance (RDA) goals and NASA nutritional goals for each component. [130]

While the nominal daily metabolic intake for a generic 70 kg crewmember is 11.82 MJ/CM-d, and the overall metabolic energy value in Table 5.2.10 falls short of this goal, this menu assessment, according to French and Perchonok (2006) excludes snacks and beverages. Once they are added to this menu the daily metabolic energy will be closer to NASA's flight requirement. Further, the inclusion of calcium fortified beverages will increase the calcium content of the menu; however, this is an area of continued focus. There may be other means of calcium delivery available to this bulk-ingredient menu that have not been used historically by NASA for human spaceflight programs.

---

128 While the crewtime values here may include some setup time, so the total time expended will not scale linearly with crew size, as a first approximation linear scaling should be sufficiently accurate.

129 French and Perchonok developed these estimates based on a crew of six. The values here represent crewtime for one 10-day menu cycle. While the crewtime values here may include some setup time, so the total time expended will not scale linearly with crew size, as a first approximation linear scaling should be sufficiently accurate.

130 While these values apply for a generic menu, French and Perchonok (2006) note that "current menu planning for shuttle and International Space Station (ISS) is personalized to kilocalorie and nutrient intake requirements; some vitamins and minerals such as vitamin C, iron and biotin have adjusted requirement levels to accommodate a reduced (microgravity) gravity environment." Further, they note "Vitamin D supplements are currently provided for the ISS crewmembers' daily use."

Table 5.2.10 Nutrient Values for 10-Day Bulk-Packaged Food Menu

Nutrition Parameter	Menu Value	Units	RDA Goal	NASA Goal	% RDA Goal	% NASA Goal
Metabolic Energy	1,777.8	kcal/CM-d	2,000.0	--	89	--
	7.44	MJ/CM-d	8.37	--	89	--
Macronutrients						
Protein	57.3	g/CM-d	50.0	--	115	--
Carbohydrates	299.0	g/CM-d	300.0	--	100	--
Fat	43.8	g/CM-d	65.0	--	67	--
Cholesterol	50.0	mg/CM-d	300.0	300.0	17	17
Saturated Fat	7.4	g/CM-d	20.0	20.0	37	37
Dietary Fiber	38.2	g/CM-d	25.0	25.0	153	153
Micronutrients						
Sodium	2,984.1	mg/CM-d	2,400.0	2,400.0	124	124
Potassium	2,915.9	mg/CM-d	3,500.0	3,500.0	83	83
Vitamin A	28,233.3	IU/CM-d [131]	5,000.0	5,000.0	565	565
Vitamin C	110.5	mg/CM-d	60.0	100.0	184	111
Calcium	369.3	mg/CM-d	1,000.0	1,000.0	37	37
Iron	18.9	mg/CM-d	18.0	10.0	105	189
Vitamin D	5.5	IU/CM-d [132]	400.0	400.0	1	1
Vitamin E	13.6	IU/CM-d [133]	30.0	30.0	45	45
Thiamin	2.1	mg/CM-d	1.5	1.5	138	138
Riboflavin	1.4	mg/CM-d	1.7	2.0	81	70
Niacin	16.8	mg/CM-d	20.0	20.0	84	84
Vitamin B_6	1.4	mg/CM-d	2.0	2.0	71	71
Folate	349.1	µg/CM-d	400.0	400.0	87	87
Vitamin B_{12}	0.1	µg/CM-d	6.0	2.0	2	5
Biotin	21.1	µg/CM-d	300.0	100.0	7	21
Pantothenic acid	3.4	mg/CM-d	10.0	5.0	34	68
Vitamin K	145.5	µg/CM-d	80.0	80.0	182	182
Phosphorous	983.7	mg/CM-d	1,000.0	1,000.0	98	98
Magnesium	379.3	mg/CM-d	400.0	350.0	95	108
Zinc	6.9	mg/CM-d	15.0	15.0	46	46
Copper	1.9	mg/CM-d	2.0	2.0	93	93
Manganese	5.2	mg/CM-d	2.0	5.0	259	104
Selenium	0.07	mg/CM-d	0.07	0.07	98	98
Chromium	0.07	mg/CM-d	0.12	0.12	58	58
Molybdenum	29.5	µg/CM-d	75.0	75.0	39	39

5.2.7 FOOD SUBSYSTEMS BASED ON BIOMASS PRODUCTION SYSTEMS

The ELS Project assumes that crops within a biomass production chamber will be grown and harvested on a bulk basis, rather than quasi-continuously. This assumption is designed to minimize crewtime requirements by making crew activities more efficient, and may be revisited when more data is available. The three diets presented here assume differing availabilities for crops grown on-site. Table 5.2.11 provides wet or fresh masses for the dietary components, as received from the Biomass Subsystem, while Table 5.2.12 provides the corresponding nutritional information.

[131] 1 International Unit (IU) of Vitamin A is the biological equivalent of 0.3 µg retinol, or of 0.6 µg beta-carotene.

[132] 1 International Unit (IU) of Vitamin D is the biological equivalent of 1/40 µg, exactly, cholecalciferol / ergocalciferol.

[133] 1 International Unit (IU) of Vitamin E is the biological equivalent of 2/3 mg, exactly, of d-alpha-tocopherol or of 1 mg of dl-alpha-tocopherol acetate.

Table 5.2.11 Menu Masses for Diets Using Advanced Life Support Crops and Resupplied Foods

	Average Production Based on Consumption, Fresh Mass [kg/CM-d]		
Crop	**Diet Using Only ELS Salad Crops [134]**	**Diet Using Salad and Carbohydrate Crops [135]**	**Diet Using All ELS Crops [136]**
Cabbage	0.0194	0.0025	n/a
Carrot	0.0365	0.040	0.0401
Celery	n/a	0.0075	n/a
Dry Bean, inc. lentil and pinto	n/a	0.013	0.0214
Green Onion	0.0045	0.034	0.0226
Lettuce	0.0156	0.021	0.0075
Mushroom	n/a	0.0013	n/a
Pea	n/a	0.0038	n/a
Peanut	n/a	n/a	0.0288
Peppers	n/a	0.031	n/a
Radish	0.009	n/a	0.0150
Rice	n/a	n/a	0.0214
Snap Bean	n/a	0.010	n/a
Soybean	n/a	n/a	0.2340
Spinach	0.0048	0.040	0.0463
Sweet Potato	n/a	0.18	0.0768
Tomato	0.0460	0.21	0.2854
Wheat	n/a	0.22	0.0963
White Potato	n/a	0.17	0.1047
Crop Sub Total	**0.1358**	**1.0**	**1.00**
Water [137]	1.1581	2.1	0.6053
Resupplied Foodstuffs	1.168 [138]	0.5 [138, 139]	0.0944
Total	**2.462**	**3.6**	**1.70**
Potable Water [140]	2.0	2.0	2.0
Food Processing Waste	TBD	TBD	0.094

In all cases, the menus given in Table 5.2.11 and Table 5.2.12 are designed for use as a unit in order to maintain nutritional integrity. However, minor changes might include moving small amounts of crops from the list to be grown and into the resupplied mass, especially for those items like rice that are prepared for consumption without post-growth processing operations that reduce the total edible biomass from the original crop. All diets are comparable in nutritional content to the International Space Station Assembly Complete food system.

---

134 From Hall, *et al.* (2000). This diet assumes a 10-day cycle.

135 From Hall and Vodovotz (1999). This diet assumes a 20-day cycle.

136 From Ruminsky and Hentges (2000). This diet assumes a 10-day cycle.

137 Water for hydration, cooking, and food preparation only. Water for clean-up is not included. Water tankage is not included.

138 Resupplied food is a combination of STS and ISS foodstuffs.

139 Oil is included as resupply. No frozen or refrigerated foods are assumed for this calculation. Packaging is not included. Resupplied food is about 40 % moisture by mass. Resupplied food includes meat.

140 The crew also requires 2.0 L/CM-d for drinks, again excluding packaging/tankage. (Perchonok, 2001)

Table 5.2.12 Nutritional Content of Diets Using Advanced Life Support Crops and Resupplied Foods

Dietary Component	Units	Goal	Diet Using Only ELS Salad Crops [134]	Diet Using Salad and Carbohydrate Crops [135]	Diet Using All ELS Crops [136]
Energy	MJ/CM-d	11.82 [141]	9.31	9.74	7.74
Carbohydrate	g/CM-d	–	312.179	357.1	314.12
Fat	g/CM-d	–	71.9141	71.6	46.84
Protein	g/CM-d	–	91.2913	73.1	54.91
Calcium, Ca	mg/CM-d	1,000 – 1,200 [142]	925.557	812	545
Iron, Fe	mg/CM-d	≤ 10 [142]	19.2385	21.5	17.23
Magnesium, Mg	mg/CM-d	350 [142]	294.687	386	376.48
Phosphorous, P	mg/CM-d	≤ 1.5 Ca intake [142]	1,440.68	1,356	1,079.52
Potassium, K	mg/CM-d	~ 3,500 [142]	3,316.57	3,723	3,179.86
Sodium, Na	mg/CM-d	1,500 – 3,500 [142]	3,909.56	3,600	3,205.96
Zinc, Zn	mg/CM-d	15 [142]	12.8077	10	7.5
Dietary Fiber	g/CM-d	10 – 25 [142]	25.1129	33.3	28.5
Percentage of Energy Contributed to Diet					
Carbohydrate	%	50 – 55 [142]	55.5	61	68.1
Fat	%	30 – 35 [142]	28.7	27	22.4
Protein	%	12 – 15 [142]	16.2	12	12

The Diet Using Only ELS Salad Crops (Hall, *et al.*, 2000) is aimed at near-term missions and supplements more traditional packaged food systems with fresh food in the form of salad crops. The bulk of the nutritional content is supplied by the packaged food and the degree of closure is low.

The Diet Using Salad and Carbohydrate Crops (Hall and Vodovotz, 1999) is also aimed at near-term missions, but this diet provides somewhere around half of the necessary mass through crops grown on-site. Resupply includes products high in protein, such as meat, in addition to seasonings and other supporting foodstuffs. Oil is also provided via resupply, as typical oil crops are not grown for this diet. Overall, this approach provides greater on-site food closure, adds only moderate additional food processing, and provides variety equivalent to that of a vegetable garden.

The Diet Using All ELS Crops (Ruminsky and Hentges, 2000) uses a wide variety of species, and provides a high degree of closure. Oil is provided from peanut, but the specific processing has not been identified. With respect to closure, the resupply mass includes herbs and condiments. As the ELS crop variety is limited, resupply items provide necessary nutrients that are not available in sufficient quantities within the grown biomass.

Levri, *et al.* (2001) examined prepackaged food systems for exploration missions to Mars using the standard Shuttle Training Menu with a 7-day menu cycle as a basis. To support the nominal NASA crewmember, the standard Shuttle Training Menu was adjusted slightly to raise the energy content to 11.82 MJ/CM-d. Data collected by Levri, *et al.* (2001) showed that the practical minimum wastage rate of resupplied food for situations in which the crew attempts to eat all of the food with which they are supplied is 3 % by mass. This remaining 3 % of the food mass adheres to the inside of the food packaging.

141 From NASA (1991).
142 From Lane, *et al.* (1996).

Table 5.2.13 presents mass and volume properties for three study food systems, as formulated by Levri, *et al.* (2001), which are modified from the standard Shuttle Training Menu. Each system assumes crew metabolic loads consistent with intravehicular activities. "As-shipped" food contains any moisture present when the food is packaged for launch. Food "as-consumed" also includes any additional water that is added to rehydrate food items and powdered beverages before consumption. The additional drinking water is computed based on the assumption that a crewmember consumes at least 239.0 milliliters of water, either within food or in addition to food, for every Mega-Joule of metabolic energy within the consumed food to provide proper hydration for metabolic assimilation of the food. [143] Some sources, such as the NRC (1989), recommend as much as 358.5 milliliters of water per Mega-Joule of energy in the consumed food. Generally, these food systems are stored under ambient conditions in an ISS food locker. Frozen storage, when noted, assumes an ISS thermoelectric freezer (Section 5.2.2). Locker and freezer volumes are computed with respect to external dimensions.

Table 5.2.13 Properties of Early Mars Diets for Intravehicular Activities Using Resupplied Foods

	Units	Modified Shuttle Training Menu [144]	Low Moisture Content Menu [144]	Menu Containing Some Frozen Food [144]
IVA Food Properties, No Packaging				
Food, Dry Mass	kg/CM-d	0.66	0.66	0.66
Food "As-Shipped"	kg/CM-d	1.15	0.92	1.37
Moisture Content of Food "As-Shipped"	%	42	28	52
Food "As-Consumed," with Rehydration	kg/CM-d	2.40	2.20	2.38
Additional Drinking Water	kg/CM-d	1.132	1.322	1.153
IVA Food Packaging Properties				
Packaging Mass	kg/CM-d	0.26	0.27	0.24
IVA Food Locker Properties [145]				
Locker Mass	kg/CM-d	0.35	0.32	0.25
Locker Volume	m^3/CM-d	0.00482	0.00452	0.00354
IVA Food Freezer Properties				
Freezer Mass	kg/CM-d	n/a	n/a	0.808
Freezer Volume	m^3/CM-d	n/a	n/a	0.00231
IVA Food and Packaging Waste				
Trash Mass	kg/CM-d	0.33	0.32	0.29

143 Alternately, this guideline may be formulated as 1.0 milliliters of water per kilocalorie of food energy consumed.

144 From Levri (2002). The values here include material that normally clings to food packaging and is discarded.

145 Food maintained at ambient conditions is stored in lockers aboard ISS. These values assume ISS "Pantry-style storage.

Table 5.2.14 provides the nutritional analysis for the food systems presented in Table 5.2.13. However, unlike Table 5.2.13, which is based on all food "as shipped," including food that adheres to the food packaging and is not consumed by the crewmember, values in Table 5.2.14 consider only the edible material a nominal crewmember consumes, and assume the crewmember attempts to eat all of the food within a package and only wastes material that adheres to the package walls.

Table 5.2.14 Nutritional Content of Early Mars Diets for Intravehicular Activities Using Resupplied Foods

Dietary Component	Units	Modified Shuttle Training Menu [146]	Low Moisture Content Menu [146]	Menu Containing Some Frozen Food [146]
Energy	MJ/CM-d	11.82	11.82	11.82
Carbohydrate	g/CM-d	376	382	371
Fat	g/CM-d	97	93	97
Protein	g/CM-d	113	115	116
Dietary Fiber	g/CM-d	33	33	37
Ash	g/CM-d	27	25	30
Water in Food [147]	g/CM-d	466	248	690
Rehydration Water	g/CM-d	1,227	1,255	982
Additional Drinking Water [148]	g/CM-d	1,132	1,322	1,153
Percentage of Energy Contributed to Diet				
Carbohydrate	%	53	54	53
Fat	%	31	30	31
Protein	%	16	16	16

Based on the dietary contributions of salad crops suggested by Perchonok, *et al.* (2002) and data compiled by Levri, *et al.* (2001), four diets using ELS salad crops and resupplied food systems are presented in Table 5.2.15. The crop values listed here are based on fresh salad crops, as received from the Biomass Subsystem, less any biomass removed during preparation. Resupplied foodstuffs are listed "as-shipped," without rehydration water, and do not include packaging materials. Values here do not include material that adheres to packaging and is ultimately wasted. Drinking water is listed near the bottom of the table. As above, the drink water assumes that a crewmember consumes at least 239.0 milliliters of water, either within food or in addition to food, for every Mega-Joule of metabolic energy within the consumed food to provide proper hydration for metabolic assimilation of the food. The listings for food processing waste consider wasted edible biomass from preparation of the salad crops plus resupplied food that adheres to packaging materials. Here it is assumed that 3 % of the food mass within a prepackaged food item will adhere to the packaging.

146 From Levri (2002). The values here are based on food "as consumed" by a crewmember, excluding material that normally clings to the food packaging.

147 Moisture, or water, held in the food as shipped before rehydration.

148 The additional drinking water is computed based on the assumption that a crewmember consumes at least 239.0 milliliters of water, either within food or in addition to food, for every Mega-Joule of metabolic energy within the consumed food to provide proper hydration for metabolic assimilation of the food. These values are identical to those in Table 5.2.13 because losses were not measured or assumed.

Table 5.2.15 Menu Masses for Diets Using Advanced Life Support Crops and Resupplied Foods

	Average Production Based on Consumption, Fresh Mass [kg/CM-d]			
Crop	**Diet Using Shuttle Training Menu and ELS Salad Crops [149]**	**Diet Using Low Moisture Content Menu and ELS Salad Crops [149]**	**Diet Using ISS Assembly Complete Menu with Some Frozen Food and ELS Salad Crops [149]**	**Diet Using Shuttle Training Menu and ELS Salad Crops plus Potato [149]**
Cabbage	0.0107	0.0107	0.0107	0.0107
Carrot	0.0357	0.0357	0.0357	0.0357
Celery	n/a	n/a	n/a	n/a
Dry Bean, inc. lentil and pinto	n/a	n/a	n/a	n/a
Green Onion	n/a	n/a	n/a	n/a
Lettuce	0.0097	0.0097	0.0097	0.0097
Mushroom	n/a	n/a	n/a	n/a
Pea	n/a	n/a	n/a	n/a
Peanut	n/a	n/a	n/a	n/a
Peppers	n/a	n/a	n/a	n/a
Radish	0.0114	0.0114	0.0114	0.0114
Rice	n/a	n/a	n/a	n/a
Snap Bean	n/a	n/a	n/a	n/a
Soybean	n/a	n/a	n/a	n/a
Spinach	0.0134	0.0134	0.0134	0.0134
Sweet Potato	n/a	n/a	n/a	n/a
Tomato	0.0143	0.0143	0.0143	0.0143
Wheat	n/a	n/a	n/a	n/a
White Potato	n/a	n/a	n/a	0.0840
Crop Sub Total	**0.0953**	**0.0953**	**0.0953**	**0.1793**
Rehydration Water [150]	1.2173	1.2455	0.9744	1.1822
Resupplied Foodstuffs [151]	1.1030	0.8831	1.3200	1.0703
Total	**2.4154**	**2.2239**	**2.3897**	**2.4319**
Drinking Water [152]	1.058	1.246	1.079	1.050
Food Processing Waste [153]	0.0371	0.0303	0.0438	0.0386

149 From Levri (2002). The values here are reflect food "as-shipped," for prepackaged food, and "as-received" from the Biomass Subsystem less preparation waste, for food grown locally. Wasted food mass is listed separately at the bottom of the table. Thus, crewmembers consume all other masses in this table except for wasted mass.

150 Water for rehydration only. Water for clean-up is not included. Water tankage is not included.

151 Masses are for food "as shipped," without packaging, storage lockers, or water for hydration.

152 Again, this listing excludes packaging/tankage.

153 These values include the wasted portion of fresh, edible biomass, as well as the wasted portion of resupplied, "as-consumed" food. These values do not include packaging.

Table 5.2.16 provides the nutritional analysis for the food systems presented in Table 5.2.15. As above, values in Table 5.2.16 consider only the edible material a nominal crewmember consumes, and the crewmember only wastes food material that adheres to the package walls or serving dishes and some edible biomass from crop preparation.

Table 5.2.16 Nutritional Content of Diets Using Advanced Life Support Crops and Resupplied Foods

Dietary Component	Units	Diet Using Shuttle Training Menu and ELS Salad Crops [154]	Diet Using Low Moisture Content Menu and ELS Salad Crops [154]	Diet Using ISS Assembly Complete Menu with Some Frozen Food and ELS Salad Crops [154]	Diet Using Shuttle Training Menu and ELS Salad Crops plus Potato [154]
Energy	MJ/CM-d	11.82	11.82	11.82	11.82
Carbohydrate	g/CM-d	376	383	372	385
Fat	g/CM-d	96	93	97	93
Protein	g/CM-d	114	115	116	111
Dietary Fiber	g/CM-d	35	35	39	36
Ash	g/CM-d	28	26	31	28
Water in Food [155]	g/CM-d	550	333	772	595
Percentage of Energy Contributed to Diet					
Carbohydrate	%	53	54	53	54
Fat	%	31	30	31	30
Protein	%	16	16	16	16

The four diets, presented in Table 5.2.15 and Table 5.2.16, are derived from the standard Shuttle Training Menu and work by Levri, *et al.* (2001). The first and fourth diets included prepackaged items from the Modified Shuttle Training Menu. See Table 5.2.13 and Table 5.2.14. The second diet considers prepackaged items from the Low Moisture Content Menu, while the third diet employs the Modified Shuttle Training Menu with some frozen items to simulate a food system similar to what is planned for ISS when that facility is completely assembled.

Perchonok, *et al.* (2002) provides estimates for salad servings based on preliminary menus for early mission scenario testing. This overall approach assumes a prepackaged food system augmented with grown salad crops. Thus, this diet is analogous to the Diet Using Only ELS Salad Crops from Hall, *et al.* (2000). Note that Table 5.2.17 provides inputs only for the dietary contributions derived directly from the vegetables. The supporting prepackaged food items are not included.

Perchonok, *et al.* (2002) assumes:

- Salad is served four times per week.
- Raw carrots are served as a snack once per week.
- Carrots are served once per week steamed.
- Spinach is served once per week either steamed or raw.
- Bok choy can be served as Cole slaw once per week.

Table 5.2.18 provides overall values for locally grown crops for this diet.

[154] From Levri (2002). The values here are based on food "as consumed" by a crewmember, excluding edible material that normally clings to food packaging or serving dishes.

[155] Moisture, or water, held in the food as shipped before rehydration.

Table 5.2.17 Updated ELS Salad Crop Only Dietary Contributions

Menu Item	Vegetable	Serving Size [156] [g]	Number per Week	Serving Rate [157] [kg/CM-d]
Salad 1	Lettuce	34	2	0.00971
	Carrot	40	2	0.01114
	Radish	40	2	0.01143
Salad 2	Spinach	20	2	0.01086
	Tomato (Cherry)	50	2	0.01429
Snack	Carrot	85	1	0.01214
Steamed Side Dish	Spinach	55	1	0.00786
Cole Slaw	Cabbage	63	1	0.009

Table 5.2.18 Overall Crops Masses for Updated Salad Crop Only Diet

Vegetable	Serving Rate [157] [kg/CM-d]
Cabbage	0.009
Carrot	0.03542
Lettuce	0.00971
Radish	0.01143
Spinach	0.01872
Tomato (Cherry)	0.01429
Total	**0.09857**

5.2.8 FOOD PROCESSING

Food processing takes the edible biomass produced by plant crops, either fresh or as prepared for storage, and produces food products and ingredients such as pasta and flour. These food products may be stored or used immediately, together with ingredients supplied from the Earth (or, for analog testing, from outside the facility), and prepared to provide food.

For long duration missions beyond low Earth orbit, current planning envisions that crops will be grown and processed on a bulk basis. Hunter and Drysdale (1996) estimated the equipment mass to perform food processing for a crew of four to be about 655 kg. However, this is a very preliminary estimate, and the actual processing equipment will likely differ. Thus, the value here is a suitable "placeholder" until more definitive values are available.

5.2.9 BIOMASS PRODUCTION

5.2.9.1 PLANT GROWTH CHAMBERS

5.2.9.1.1 LIGHTING ASSUMPTIONS

Plants offer the greatest opportunity for self-sufficiency and, possibly, cost reduction for long duration missions, but at the same time have some of the greatest unknowns. An attempt has been made to estimate the mass of a plant growth system on the surface of an extraterrestrial body such as Mars. Two uncertainties are the cost of power, and the availability of water locally. The initial assumption, as shown in Table 5.2.19, is that natural lighting cannot be used because the solar radiation reaching Mars is only 43% that reaching Earth, and Mars is susceptible to large dust storms that can reduce light reaching the

[156] Mass "as prepared."

[157] Mass per crewmember per day "as grown." This is listed as fresh edible biomass. The associated inedible biomass is also produced as given in Table 5.2.25.

surface. Yet recent analyses suggest that some latitudes on Mars can receive up to 30 mol/(m²●d) for much of the year, which is nearly 50% that of some of the brightest areas on Earth (Clawson, 2006), so future biomass production systems might use natural sunlight supplemented by electrical lighting to achieve optimal biomass production per infrastructure mass required.

In addition, fresh food is crucial to crew welfare, and nutritionists generally recommend deriving food from original sources such as grown plants and/or livestock. Because livestock production is more expensive even terrestrially, early in-situ food production will likely concentrate on growing crops. As shipped, fresh foodstuffs from crops are heavier than dehydrated or low-moisture foods due to the significant mass associated with natural moisture. Thus, while plants will probably be grown on an extraterrestrial body, the question remains as to what proportion of the food will be grown locally versus what proportion will be shipped.

Table 5.2.19 Lighting Data

Parameter [Units]	low	nominal	high
Light Conversion Efficiency [$W_{photosynthetically\ active\ radiation}/W_{electrical}$] [158]	0.18 (1)	0.3 (2)	0.5 (1)
Light Delivery Efficiency [$PPF_{delivered}/PPF_{emitted}$] [159]	0.3 (1)	0.7 (3)	0.8 (3)
Overall Lighting Efficiency	0.05 (1)	0.21 (3)	0.40 (3)

References

(1) Sager (1999)
(2) Ewert (1998)
(3) Sager (2006)

A key parameter for plant growth is lighting, and electrical lighting might provide this. The efficiency of electrical lighting depends on the efficiency of the conversion of electricity into radiant energy, and the direction of this energy onto the plant canopy. The conversion efficiency depends on the type of lamp. Thus, many factors impact photosynthetically active radiation (PAR). Photosynthetic photon flux (PPF) is another way of expressing PAR but specifically using quantum units, such as µmol/(m²●s), instead of W/m². Incandescent lamps are good because they are red-rich, but the conversion efficiency to PAR is low. High-pressure discharge lamps produce more light, but their spectrum varies depending on the type of lamp, with metal halide lamps producing a broad spectrum and high-pressure sodium producing a yellow-orange light with a low amount of blue. Both types have proved acceptable for photosynthesis. New lamp types, such as microwave lamps, have a high efficiency and a broad spectrum (Sager, 1999), yet improvements are needed in their magnetron power supplies to sustain long duty cycles. Direction of the energy to the canopy depends on the geometry of the lamp, the distance from the lamp to the canopy, and the quality of the reflectors. The Biomass Production Chamber (BPC) at Kennedy Space Center used relatively unsophisticated reflectors, and only achieved a rating of about 30%. Much higher ratings can be achieved, but maintaining these high ratings over long time periods requires upkeep, such as periodic cleaning and adjustments to the lamp reflectors.

[158] Light Conversion Efficiency describes the proportion of lighting system power that eventually becomes PPF.
[159] Light Delivery Efficiency describes the proportion of PPF at the lamp surface that is delivered to the canopy.

5.2.9.1.2 LIGHTING EQUIPMENT DATA

Additional assumptions can be made about specific lighting systems. Data for 400 W high-pressure sodium lights (HPS) are shown in Table 5.2.20.

Table 5.2.20 High Pressure Sodium Lighting Data

	Units	low	nominal	high
Lamp Power (not including ballast)	kW	--	0.4 (2)	--
Lamp Mass	kg		0.21 (2)	
Lamp Life	10^3 h		20 (1)	24 (1)
Number of 400 W Lamps per Area to Give 1,000 μmol/(m²•s)	lamps/m²	1.43 (3)	4.504 (4)	9.259 (3)
Time to Change Out Lamps	CM-h		0.03 (5)	
Photoperiod per Day [160]	h/d	10 (1)	10-24 [161]	24 (1)
Lamp Volume for Resupply	$m^3 \times 10^{-3}$		0.625 (1)	
Ballast Power	kW/lamp	0.03 (1)	0.06 (2)	0.08 (1)
Ballast Mass	kg/lamp	2.85 (6)	4.76 (1)	9.52 (2)
Ballast Life	10^3 h		88 (7)	
Mass of Coldplate, Water Barrier, Condensing Heat Exchangers per Growing Area	kg/m²	4.43 (8) [162]	7.02 (8) [163]	25.83 (8) [164]
Height of Lighting Assembly	m		0.15 (9)	0.3 (1)
Lamp Resupply Mass Factor	kg/kg		0.8 (10)	
Lamp Resupply Volume Factor	m³/m³		0.5 (1)	

References

(1) Drysdale (1999a)
(2) Hanford (1997)
(3) Hunter and Drysdale (2002) based on Sager (1999)
(4) Hunter and Drysdale (2002) based on Ewert (1998)
(5) A rough value from Hunter, J.
(6) Ewert (2001)
(7) Barta and Ewert (2002)
(8) Ewert (1998)
(9) BIO-Plex drawings
(10) See Table 3.2.8. This value corresponds to storing lamps within trays.

Resupply mass and volume factor account for the extra mass and volume required to package replacement lamps. This is in addition to any mass and volume associated with the lamp itself.

160 This is generally crop dependent, although the values here provide the range for all ELS crops.
161 See Table 5.2.24 for nominal photoperiods of candidate ELS crops.
162 This system uses only a bulb in a water jacket. Transmissivity, relative to the baseline case using a coldplate and no barrier, is 0.92. The ratio of total radiation to PAR is 1.6 compared to 2.0 for the baseline. Note: This configuration provided the best overall performance in testing.
163 This system uses a bulb in a water jacket with a Teflon barrier. Transmissivity, relative to the baseline case using a coldplate and no barrier, is 0.846. The estimated ratio of total radiation to PAR is 1.6 compared to 2.0 for the baseline.
164 This system uses a coldplate with a glass barrier. Transmissivity, relative to the baseline case using a coldplate and no barrier, is 0.89. The ratio of total radiation to PAR is 1.7 compared to 2.0 for the baseline.

5.2.9.1.3 PLANT GROWTH CHAMBER COST FACTORS

The cost factors for a plant growth chamber have been estimated on a square-meter basis. This addresses the plant growth chamber itself. If crew access is needed, and it generally will be, provision must be made for that access. A reasonable number might be 25 – 50% of the plant canopy area. Lower numbers might be adequate if extensive physical automation is planned. A higher number might be appropriate if most tasks are performed manually. Crew access space would not, however, require the equipment and other costs shown here. Crew height will be greater than the height of most plants that have been considered for ELS crops. Layout of the crops and crew space will depend on issues such as the type of plant lighting. Thus, if natural lighting is to be used, only a single layer of crops might be possible due to the diffuseness of light on Mars. In this case, the limiting height would be the taller of the crew and the plants. Table 5.2.21 (Drysdale, 1999b) presents preliminary values for an optimized biomass production chamber based on projecting current NASA growth chambers to flight configurations.

Table 5.2.21 Plant Growth Chamber Equivalent System Mass per Growing Area

Component	Mass [kg/m^2]	Volume [m^3/m^2]	Power [kW/m^2]	Thermal Control [kW/m^2]	Crew-time [CM-h /m^2•y]	Logistics [kg /m^2•y]	Reference
Crops	20.0	–	–	–	13.0		From Drysdale (1999b)
Shoot Zone	3.6	0.67	0.3 [165]	0.3 [165]	–	–	
Root Zone Water and Nutrients	36.8	0.11	0.14	0.14	TBD	TBD	
Lamps	22.9	0.25	2.1	2.1	0.027	0.57	
Ballasts	8.4	TBD	0.075	0.075	0.032	3.24	
Mechanization Systems	4.1	TBD	TBD	TBD	TBD	TBD	
Secondary Structure	5.7	–	–	–	–	–	
Total	**101.5**	**1.03**	**2.6**	**2.6**	**13.1**	**3.81**	

[165] Power consumption and thermal control within the shoot zone reflect fans for gas movement.

5.2.9.1.4 BIOMASS PRODUCTION CHAMBER SPECIFICATIONS FOR AN INTEGRATED TEST FACILITY

Barta, *et al.* (1999) presents preliminary physical values for the first biomass production chamber of the now-suspended Bioregenerative Planetary Life Support Systems Test Complex (BIO-Plex). [166] See Table 5.2.22. Because many conditions will vary as a function of test goals and each cultivar's needs, nominal values are not generally appropriate. Further, some values, as noted, are controlled for the chamber overall while others may be set for each shelf of crops. Nominally, the total atmospheric pressure is maintained at 101±3 kPa. For vegetative plants alone, the plant chamber atmosphere must be at least 5.0 % (5 kPa) oxygen. However, to support human respiration without personal protective equipment, the chamber atmosphere must be 18.5 % (18.5 kPa) oxygen. Interested readers should also consult Wheeler, *et al.* (2003) for crop-specific guidance using NASA's envisioned biomass production technologies.

Table 5.2.22 Physical Parameters for the First Biomass Production Chamber in BIO-Plex

Parameter	Units	low	high	Reference
Overall Chamber Values:				
Oxygen Concentration	%	18.5 (5.0) [167]	23.5	From Barta, *et al.* (1999).
Partial Pressure of Carbon Dioxide	kPa	0.03	1.0	
Values Controlled per Shelf:				
Air Temperature, Dark Cycle	°C	15	25	
Air Temperature, Light Cycle	°C	16	35	
Relative Humidity	%	65	85	
Air Velocity	m/s	0.2	0.7	
Photosynthetic Photon Flux	µmol/m²•s	0	1,500	
Photoperiod	h	0	24	
Nutrient Solution pH [168]	–	4.0	8.0	
Nutrient Solution Conductivity	S/m	< 0	0.30	
Nutrient Solution Flow Rate /Growth Area	L/s•m²	< 0	0.1	
Nutrient Solution Depth	m	0.010	0.15	
Shoot Zone Height	m	0.35	0.70	
Root Zone Depth	m	0.10	0.15	

The total growth area within the first BIO-Plex biomass production chamber is 79.6 m² (Castillo, 2000). This growing area is arranged in ten shelves stacked in three columns. The center stack contains four shelves while each side stack provides three shelves that conform to the chamber wall profile. Specific shelf dimensions are listed in Table 5.2.23. Aisles between growing area shelves are 0.508 m wide.

---

166 *Editor's Note:* At this time, the scope and purpose of the integrated test stand to support hardware development is under review and development, including testing, of technologies to support long-duration missions, has been deferred. Because of prior programs, such as the Bioregenerative Planetary Life Support Systems Test Complex (BIO-Plex), very precise values are available for some earlier facilities. The configuration and specifications in the actual ELS integrated testing facility, however, may differ from those listed here. The values here are likely representative of a bioregenerative research facility.

167 Nominally, to allow human entry into the biomass production chamber, oxygen concentration will be maintained at or above 18.5%. The lower listed limit will support plant respiration and thus applies if unprotected human beings will not enter the biomass production chamber.

168 Potential of hydrogen (pH)

Table 5.2.23 Growing Area Dimensions for the First BIO-Plex Biomass Production Chamber

Shelf Location [169]	Shelf Width [m]	Shoot Zone Height [m]	Growth Area [m²]
Left Shelving Stack:			
Shelf 1 (top)	0.360	0.440	2.87
Shelf 2 (middle)	0.720	0.700	5.73
Shelf 3 (bottom)	0.360	0.400	2.87
Center Shelving Stack:			
Shelf 1 (top)	1.500	0.500	14.17
Shelf 2	1.500	0.500	14.17
Shelf 3	1.500	0.500	14.17
Shelf 4 (bottom)	1.500	0.500	14.17
Right Shelving Stack:			
Shelf 1 (top)	0.360	0.440	2.87
Shelf 2 (middle)	0.720	0.700	5.73
Shelf 3 (bottom)	0.360	0.400	2.87
Total			**79.6**

5.2.9.2 PLANT VALUES

5.2.9.2.1 TIME-AVERAGED VALUES DESCRIBING PLANT GROWTH

Plant growth rates depend on the type of plant (species and cultivar) and the growth conditions. Table 5.2.24 through Table 5.2.26 provide design values for candidate ELS Project crops (Behrend and Henninger, 1998). Table 5.2.24 lists nominal environmental conditions for each crop. Table 5.2.25 presents overall life-cycle growth rates in terms of grams of biomass per square meter per day. The dry mass (dw), fresh mass (fw) [170], and water content for both edible and inedible biomass are given. The harvest index is the ratio of edible biomass to total biomass. Table 5.2.26 provides nominal and upper biomass generation rates. The lower rate is zero. The given upper limit is the highest rate recorded in the literature. These may not be the absolute maximum, however. For example, wheat may well produce higher growth rates with higher light intensities (Bugbee, 1998). These maximal rates are generally for small chambers under ideal conditions, and they might be difficult to achieve in larger chambers that have been optimized for spaceflight. The nominal rates are derived from testing within the Biomass Production Chamber at Kennedy Space Center (Wheeler, 2001b), and the values presented may be composite or average values from several different tests. These rates are lower partly because of the lower light levels, but a less homogeneous environment, due to the larger scale, may also impact the growth rates. In addition, BPC data are conservative in that they used fixed spacing from germination to harvest. Use of variable spacing or transplanting schemes for widely spaced crops could save up to 15 days on production cycles. For example, the cycle for lettuce is reduced from 28 to ~14 days. Obviously, seedling nurseries would require some area, but this would be on the order of only 1% to 10% of the area required for mature-plant production. Table 5.2.26 also presents the biomass chemical composition in terms of carbon and the metabolic reactants and products averaged over the crop life cycle.

---

169 Locations are defined with respect to viewing the biomass production chamber from either end. Shelf numbers are defined such that "1" is the top shelf and shelves below in the same stack are numbered sequentially. From Castillo (2000). Barta, *et al.* (1999) details earlier work for the BIO-Plex biomass production chamber configuration and quotes slightly longer shelves for both the left and right shelving stacks. In both the earlier work and the current configuration the center growing areas are identical.

170 Historically, "dw" and "fw" denote "dry weight" and "fresh weight," respectively. Scientifically, these quantities are masses and not weights. Weight is a force derived from the gravitational attraction between a body and, practically, a much larger body such as a planet. Thus, a body always has mass, but it has weight only within a planet's gravitational field.

Table 5.2.24 Exploration Life Support Cultivars, Intended Usage, and Environmental Growth Conditions

Crop	ELS Transit Crop (1)	ELS Surface Crop (1)	Photosynthetic Photon Flux [mol/(m²•d)]	Diurnal Photo-Period [h/d] (3)	Growth Period [171] [d_{AP}]	Temperatures [°C] (3) Air during Day	Air during Night	Nutrient Solution
Cabbage	×	×	28 (2)		85 (4)	>25		
Carrot	×	×	28 (2)		75 (4)	16-18		
Chard	×	×	17 (2)	16	45 (3)	23	23	23
Celery			17 (2)		75 (4)			
Dry Bean		×	24 (3)	18	85 (5)	28	24	26
Green Onion			26 (6)		50 (5)	25	25	25
Lettuce	×	×	17 (3)	16	28 (3)	23	23	23
Mushroom			0	0				
Onion	×	×	17		50			
Pea			24 (2)		75 (4)			
Peanut		×	27 (3)	12	104 (3)	26	22	24
Pepper			27 (2)		85 (5)			
Radish	×	×	26 (6)	16	25 (4)	23	23	23
Red Beet			17 (3)	16	38 (3)	23	23	23
Rice		×	33 (3)	12	85 (3)	28	24	24
Snap Bean			24 (2)	18	85 (5)	28	24	26
Soybean		×	28 (3)	12	97 (3)	26	22	24
Spinach	×	×	17 (3)	16	30 (4)	23	23	23
Strawberry			22 (3)	12	85 (4)	20	16	18
Sweet Potato		×	28 (3)	12	85 (5)	26	22	24
Tomato	×	×	27 (3)	12	85 (3)	24	24	24
Wheat		×	115 (4)	20-24	79 (3)	20	20	18
White Potato		×	28 (3)	12	132	20	16	18

References

Information from Drysdale (2001) except as noted.

(1) Behrend and Henninger (1998)
(2) Estimated by similarity to other crops.
(3) Wheeler, *et al.* (2003)
(4) Wheeler (2001b)
(5) Ball, *et al.* (2001) and EDIS (2001)
(6) Richards, *et al.* (2005, 2006)

171 Growth period is measured here in terms of "days after planting," [d_{AP}].

Table 5.2.25 Overall Physical Properties at Maturity for Nominal Crops [172]

Crop	Mature Plant Height [m]	Harvest Index [%]	Edible Biomass Productivity			Inedible Biomass Productivity		
			Dry Basis [g_{dw} /m²•d]	Fresh Basis [g_{fw} /m²•d]	Fresh Basis Water Content [%]	Dry Basis [g_{dw} /m²•d]	Fresh Basis [g_{fw} /m²•d]	Fresh Basis Water Content [%]
Cabbage	0.35	90	6.06 (2)	75.78	92	0.67	6.74	90
Carrot	0.25	60	8.98 (2)	74.83	88	5.99	59.87	90
Chard	0.45 (1)	65 (1)	7.00 (1)	87.50	92	3.77	37.69	90
Celery	0.25	90	10.33 (2)	103.27	90	1.15	11.47	90
Dry Bean	0.50 (1)	40 (1)	10.00 (3)	11.11	10	15.00	150.00	90
Green Onion	0.25	90	9.00 (3)	81.82	89	1.00	10.00	90
Lettuce	0.25 (1)	90 (1)	6.57 (1)	131.35	95	0.73	7.30	90
Mushroom		90			90			90
Onion	0.25	80	9.00	81.82	89	2.25	22.50	90
Pea	0.50	40	10.73 (2)	12.20	12	16.10	161.00	90
Peanut	0.65 (1)	25 (1)	5.63 (1)	5.96	5.6	16.88	168.75	90
Pepper	0.40	45	10.43 (3)	148.94	93	12.74	127.43	90
Radish	0.20 (1)	50 (1)	5.50 (3)	91.67	94 (3)	5.50	55.00	90
Red Beet	0.45 (1)	65 (1)	6.50	32.50	80	3.50	35.00	90
Rice	0.80 (1)	30 (1)	9.07 (1)	10.30	12	21.16	211.58	90
Snap Bean	0.50	40	11.88 (2)	148.50	92 (3)	17.82	178.20	90
Soybean	0.55 (1)	40 (1)	6.00 (1)	6.60	10	6.80	68.04	90
Spinach	0.25 (1)	90 (1)	6.57 (3)	72.97	91	0.73	7.30	90
Strawberry	0.25 (1)	35 (1)	7.79 (2)	77.88	90	14.46	144.46	90
Sweet Potato	0.65 (1)	40 (1)	15.00 (3)	51.72	71	22.50	225.00	90
Tomato	0.40 (1)	45 (1)	10.43 (1)	173.76	94	12.74	127.43	90
Wheat	0.50 (1)	40 (1)	20.00 (3)	22.73	12	30.00	300.00	90
White Potato	0.65 (1)	70 (1)	21.06 (1)	105.30	80	9.03	90.25	90

References

Information from Drysdale (2001) except as noted.

(1) Wheeler, *et al.* (2003)

(2) Ball, *et al.* (2001) and EDIS (2001)

(3) Wheeler (2001b)

172 Productivities could increase for most species by ~10 to 15% by use of transplanting schemes for more efficient spacing according to Wheeler, *et al.* (2006).

Table 5.2.26 Nominal and Highest Biomass Production, Composition, and Metabolic Products [173]

Crop	Total Biomass (Edible + Inedible), Dry Basis [$g_{dw}/m^2 \bullet d$] nominal	high	Carbon Content [%]	Metabolic Reactants and Products: Oxygen (O_2) Production [$g/m^2 \bullet d$]	Carbon Dioxide (CO_2) Uptake [$g/m^2 \bullet d$]	Water (H_2O) Uptake / Transpiration [$kg/m^2 \bullet d$]
Cabbage	6.74	10.0	40	7.19	9.88	1.77
Carrot	14.97	16.7	41	16.36	22.50	1.77
Chard	10.77		40	11.49	15.79	1.77
Celery	11.47		40	12.24	16.83	1.24
Dry Bean	25.00		40	30.67	42.17	2.53
Green Onion	10.00		40	10.67	14.67	1.74
Lettuce	7.30	7.9	40 (1)	7.78	10.70	1.77
Mushroom						
Onion	11.25		40	12.00	16.50	1.74
Pea	26.83		40 (3)	32.92	45.26	2.46
Peanut	22.50	36.0	60 (2)	35.84	49.28	2.77
Pepper	23.17		40	24.71	33.98	2.77
Radish	11.00		40 (2)	11.86	16.31	1.77
Red Beet	10.00		41	7.11	9.77	1.77
Rice	30.23	39.0	42	36.55	50.26	3.43
Snap Bean	29.70		40	36.43	50.09	2.46
Soybean	11.34	20.0	46 (1)	13.91	19.13	2.88
Spinach	7.30		40	7.78	10.70	1.77
Strawberry	22.25		43 (2)	25.32	34.82	2.22
Sweet Potato	37.50	51.3	41 (2)	41.12	56.54	2.88
Tomato	23.17	37.8	43 (2)	26.36	36.24	2.77
Wheat	50.00	150.0	42 (1)	56.00	77.00	11.79
White Potato	30.08	50.0	41 (1)	32.23	45.23	2.88

References

Information from Drysdale (2001) except as noted.

(1) Wheeler, *et al.* (1995)

(2) Calculated

(3) Orcun and Wheeler (2003)

173 Productivities could increase for most species by ~10 to 15% by use of transplanting schemes for more efficient spacing according to Wheeler, *et al.* (2006).

Table 5.2.27 Inedible Biomass Generation for Exploration Life Support Diets Based on Fresh Weights

				Diet Using Only ELS Salad Crops		Diet Using Salad and Carbohydrate Crops		Diet Using All ELS Crops	
Crop	**ELS Crop**	**Edible Biomass [g/m²•d]**	**Inedible Biomass [g/m²•d]**	**Diet Growing Area [m²/CM]**	**Total Inedible Biomass [kg/CM-d]**	**Diet Growing Area [m²/CM]**	**Total Inedible Biomass [kg/CM-d]**	**Diet Growing Area [m²/CM]**	**Total Inedible Biomass [kg/CM-d]**
Cabbage	×	75.78	6.74	0.256	0.002	0.033	0.000	n/a	n/a
Carrot	×	74.83	59.87	0.488	0.029	0.535	0.032	0.536	0.032
Chard	×	87.50	37.69	n/a	n/a	n/a	n/a	n/a	n/a
Celery		103.27	11.47	n/a	n/a	0.073	0.001	n/a	n/a
Dry Bean	×	11.11	150.00	n/a	n/a	1.170	0.176	1.926	0.289
Green Onion		81.82	10.00	0.055	0.001	0.416	0.004	0.276	0.003
Lettuce	×	131.35	7.30	0.119	0.001	0.160	0.001	0.057	0.000
Mushroom				n/a	n/a	TBD	0.0013	n/a	n/a
Onion	×	81.82	22.50	n/a	n/a	n/a	n/a	n/a	n/a
Pea		12.20	161.00	n/a	n/a	0.311	0.050	n/a	n/a
Peanut	×	5.96	168.75	n/a	n/a	n/a	n/a	4.832	0.815
Pepper		148.94	127.43	n/a	n/a	0.208	0.027	n/a	n/a
Radish	×	91.67	55.00	0.098	0.005	n/a	n/a	0.164	0.008
Red Beet		32.50	35.00	n/a	n/a	n/a	n/a	n/a	n/a
Rice	×	10.30	211.58	n/a	n/a	n/a	n/a	2.078	0.440
Snap Bean		148.50	178.20	n/a	n/a	0.067	0.012	n/a	n/a
Soybean	×	5.04	68.04	n/a	n/a	n/a	n/a	46.429	3.159
Spinach	×	72.97	7.30	0.066	0.000	0.548	0.004	0.635	0.005
Strawberry		77.88	144.46	n/a	n/a	n/a	n/a	n/a	n/a
Sweet Potato	×	51.72	225.00	n/a	n/a	3.480	0.783	1.485	0.334
Tomato	×	173.76	127.43	0.265	0.034	1.209	0.154	1.642	0.209
Wheat	×	22.73	300.00	n/a	n/a	9.679	2.904	4.237	1.271
White Potato	×	105.30	90.25	n/a	n/a	1.614	0.146	0.994	0.090
Total				**1.35**	**0.07**	**19.50**	**4.29**	**65.29**	**6.66**

Plant environmental demands differ compared to the crew's requirements. For example, the optimum partial pressure of carbon dioxide for plant growth is roughly 0.10 to 0.20 kPa (Wheeler, *et al.*, 1993); below this, productivities decrease. Sensitivity may vary from species to species, but plants do appear to have reduced productivity at very high partial pressures of carbon dioxide that are considered within the normal range for crew (up to about 1.0 kPa). Similarly, plants require higher relative humidity – about 75% – to avoid water stress and minimize nutrient solution usage. Such humidity levels are at the high end for crew comfort. Further, some key plants, such as wheat and potatoes, are most productive at temperatures below the standard crew comfort zone. Finally, at nominal Earth ambient carbon dioxide partial pressures ($p[CO_2]$ = 0.04 kPa), plants grow better under atmospheres with reduced partial pressures of oxygen ($p[O_2]$ less than 21 kPa). If the partial pressure of carbon dioxide is elevated to 0.1 to 0.2 kPa, the benefits of reduced oxygen partial pressure are negligible.. However, because human beings live with plants on Earth, plants and crew can live in a common atmosphere.

Table 5.2.27 enumerates growing areas and fresh weight inedible biomass production associated with the ELS Project diets presented in Section 5.2.7. The edible biomass values are the nominal values listed above in Table 5.2.25. The total inedible biomass production is based on the edible biomass production and the harvest index, and does not include any waste associated with uneaten portions or the material removed during food preparation.

5.2.9.2.2 TIME-AVERAGED VALUES TO SUPPORT PLANT GROWTH

Table 5.2.28 presents some details about plant growth with current hydroponic technology, providing water and nutrient use necessary to keep the plants healthy. Luxuriant nutrient levels were provided, so lower levels of nutrients might also suffice. The nutrient solution shown was formulated to require only acid addition for pH control. However, alternative formulations might require less active pH control (and thus fewer consumables to maintain the pH). Finally, plant productivity varies from one cropping cycle to the next even under controlled conditions, so the values here should be viewed as typical. Actual productivity from any real cropping cycle might vary.

Table 5.2.28 Plant Growth and Support Requirements per Dry Biomass

	Units	Soybean	Wheat	Potato	Lettuce	Reference
Water Usage per Dry Biomass	L/g_{dw}	0.32	0.13	0.15	0.34	From Wheeler, *et al.* (1999).
Stock Usage per Dry Biomass	L/g_{dw}	0.026	0.021	0.022	0.034	
Acid Usage per Dry Biomass [174]	g_{acid}/g_{dw}	0.0548	0.0744	0.0428	0.0618	

Table 5.2.29 and Table 5.2.30 describe the major ionic components of the nutrient solutions used for studies within the Biomass Production Chamber at Kennedy Space Center as determined from Wheeler, *et al.* (1996) and Wheeler, *et al.* (1997). As indicated, the initial stock solution, which is at the desired concentration to support plant growth, is more dilute than the mixture of two replenishment solutions that are added incrementally, as necessary, to replace nutrient used by plants or otherwise lost. For this facility, replenishment solution is added in a fixed concentration as a function of electrical conductivity regardless of which ions are depleted. Each salt primarily contributes one important element, as noted. The elemental concentrations, then, are with respect to the listed important element. Note that because pH is controlled by adding nitric acid (HNO_3), the nitrogen content of the acid must be considered in calculating the total nitrogen provided to the plants. In addition, minerals might be lost to the plants through uptake by microorganisms and by precipitation from solution. Some nitrogen may leave nutrient solution via volatilization as nitrogen gas or as nitrogen oxides as a result of microbial metabolism. Finally, to inhibit ionic build-up within the nutrient solution due to the procedures outlined here, especially sodium or boron, the nutrient solution is often replaced at regular intervals.

[174] For nitrate-based formulations. Acid is provided as 0.4 M HNO_3. One mole of nitric acid (HNO_3) contains 63.013 grams of solute.

Table 5.2.29 Composition of Initial Nutrient Solution

Initial Ionic Component		Important Element		Elemental Atomic Weight	Concentration [meq/L] [175]	Ion Molecular Weight	Valence	Content g/L (element)	Content g/L (ion)	Reference
Nitrate,	NO_3^-	Nitrogen,	N	14.01	7.5	62.00	–1	0.1051	0.465	Wheeler, *et al.* (1996)
Phosphate,	PO_4^{3-}	Phosphorous,	P	30.97	0.5	94.97	–3	0.0465	0.142	
Potassium,	K^+	Potassium,	K	39.10	3	39.10	+1	0.1173	0.117	
Calcium,	Ca^{2+}	Calcium,	Ca	40.08	2.5	40.08	+2	0.2004	0.200	
Magnesium,	Mg^{2+}	Magnesium,	Mg	24.31	1	24.31	+2	0.0486	0.049	
Sulfate,	SO_4^{2-}	Sulfur,	S	32.06	1	96.06	–2	0.0641	0.192	
Total									**1.166**	

Table 5.2.30 Composition of Replenishment Nutrient Solution

Replenishment Ionic Component		Important Element		Elemental Atomic Weight	Concentration [meq/L] [175]	Ion Molecular Weight	Valence	Content g/L (element)	Content g/L (ion)	Reference
Nitrate,	NO_3^-	Nitrogen,	N	14.01	75	62.00	–1	1.051	4.650	Wheeler, *et al.* (1997)
Phosphate,	PO_4^{3-}	Phosphorous,	P	30.97	7.5	94.97	–3	0.697	2.137	
Potassium,	K^+	Potassium,	K	39.10	68	39.10	+1	2.659	2.659	
Calcium,	Ca^{2+}	Calcium,	Ca	40.08	7.5	40.08	+2	0.601	0.601	
Magnesium,	Mg^{2+}	Magnesium,	Mg	24.31	9.8	24.31	+2	0.476	0.476	
Sulfate,	SO_4^{2-}	Sulfur,	S	32.06	9.8	96.06	–2	0.628	1.883	
Total									**12.406**	

175 Here the units, [meq/L], denote milli-equivalent weights of the ionic component per liter of solution. An equivalent weight is the ion's molecular weight divided by the absolute value of the ion's valence.

5.2.9.3 MODIFIED ENERGY CASCADE MODELS FOR CROP GROWTH

Cavazzoni (2001) presents a package of models appropriate for use in system-level modeling. These Modified Energy Cascade (MEC) models build upon the earlier work of Volk, *et al.* (1995) and benefit from studies by Monje (1998), Monje and Bugbee (1998), and Jones and Cavazzoni (2000) [176].

The MEC models calculate biomass production, on a dry-mass basis, as a function of photosynthetic photo flux, PPF, and the atmospheric carbon dioxide concentration, [CO_2]. [177] The atmospheric temperatures, one for light periods and a second for dark periods, and the photoperiod are constant and the plant growth is not limited by water or nutrients. These models accommodate daily variations in PPF and [CO_2], but weighted values of PPF and [CO_2] should be used to estimate time for canopy closure, t_A. The models generally apply over a range of PPF from 200 to 1,000 µmol/m²•s [178] and a range of [CO_2] from 330 to 1,300 µmol/mol. For rice and wheat, these models apply up to 2,000 µmol/m²•s. The PPF range for lettuce is limited to 200 to 500 µmol/m²•s, because a light integral of only 17 mol/m²•d is recommended to prevent leaf tip burn. See, for example, Hopper, *et al.* (1997), for recommended PPF requirements for crop growth.

5.2.9.4 MODIFIED ENERGY CASCADE MODELS FOR CROP BIOMASS PRODUCTION

The following material outlines the top-level MEC models developed by Cavazzoni (2001) in detail. The various parameters depend upon the crop cultivar and growing conditions. Parameters for nominal conditions of lighting, temperature, and atmospheric composition are presented in Section 5.2.9.5.1.

The fraction of PPF absorbed by the plant canopy, A, is a function of time, t, in terms of days after emergence [d_{AE}], and the time for canopy closure, t_A [d_{AE}] by the following relationship:

$$A = A_{MAX}\left(\frac{t}{t_A}\right)^n \qquad \text{for } t < t_A$$

$$A = A_{MAX} \qquad \text{for } t \geq t_A \qquad \text{Equation 5.2-2}$$

where A_{MAX} is 0.93 and n is enumerated for various crops in Table 5.2.31 below. t_A is computed as a function of PPF and [CO_2] for each crop. This function is presented below with appropriate coefficients.

Table 5.2.31 Values for the Exponent n in MEC Models

Crop	n
Wheat	1.0
Rice, Soybean, Sweet Potato	1.5
Dry Bean, Peanut, White Potato	2.0
Lettuce, Tomato	2.5

---

176 Jones and Cavazzoni present the Top-Level Energy Cascade models. Though the Modified Energy Cascade equations and the Top-Level Energy Cascade equations share some ideas, the Top-Level Energy Cascade equations provide models for quantities that are input parameters for the Modified Energy Cascade equations. Further, the Modified Energy Cascade equations include models to compute biomass oxygen generation.

177 Other environmental and physiological factors may also vary. See Cavazzoni (2001) for complete details on this model.

178 Photosynthetic photon flux (PPF) is commonly expressed in units of either µmol/(m²•s), as listed here, or mol/(m²•d), as denoted in Table 5.2.24. The units for PPF are related by the expression:

$$\text{PPF [µmol/(m}^2\bullet\text{s)]} = \text{PPF [mol/(m}^2\bullet\text{d)]} \times 1/H \times (1\ \text{h}/3600\ \text{s}) \times (10^6\ \text{µmol}/1\ \text{mol})$$

where H is photoperiod [h/d]. See Table 5.2.45 for nominal values of H, which are designated H_O. Because units for PPF depend upon the duration during which crops receive photosynthetic irradiation, the conversion to a "per day" basis depends on the diurnal photoperiod per day.

The canopy quantum yield, CQY, [$\mu mol_{Carbon\ Fixed}/\mu mol_{Absorbed\ PPF}$] is defined by:

$$CQY = CQY_{MAX} \qquad \text{for } t \le t_Q$$

$$CQY = CQY_{MAX} - (CQY_{MAX} - CQY_{MIN})\frac{(t - t_Q)}{(t_M - t_Q)} \qquad \text{for } t_Q < t \le t_M$$

Equation 5.2-3

where t_M is time at crop harvest or maturity [d_{AE}], and t_Q is the time at onset of canopy senescence [d_{AE}]. t_M and t_Q are model constants. CQY_{MAX} is a crop-specific function of PPF and [CO_2], as noted below, while CQY_{MIN} is a crop-specific constant.

The 24-hour carbon use efficiency, CUE_{24}, a fraction, is constant for most crops. In such cases, a single value is listed under CUE_{MAX} in the tables below. For legumes, CUE_{24} is described by:

$$CUE_{24} = CUE_{MAX} \qquad \text{for } t \le t_Q$$

$$CUE_{24} = CUE_{MAX} - (CUE_{MAX} - CUE_{MIN})\frac{(t - t_Q)}{(t_M - t_Q)} \qquad \text{for } t_Q < t \le t_M$$

Equation 5.2-4

where CUE_{MAX} and CUE_{MIN} are model inputs unique to each crop.

The daily carbon gain, DCG, [$mol_{Carbon}/m^2 \bullet d$] is computed from:

$$DCG = 0.0036\,\frac{s}{h}\,\frac{mol}{\mu mol} \times H \times CUE_{24} \times A \times CQY \times PPF$$

Equation 5.2-5

where H is the photoperiod [h/d], a crop-specific model input. Photoperiod may vary daily, but see Cavazzoni (2001) for the assumptions involved.

The daily oxygen production, DOP, [$mol_{O_2}/m^2 \bullet d$] may be computed using:

$$DOP = OPF \times DCG$$

Equation 5.2-6

where OPF is the oxygen production fraction [mol_{O_2}/mol_{Carbon}], which is a crop specific parameter.

The crop growth rate, CGR [$g/m^2 \bullet d$], is related to DCG by:

$$CGR = MW_C\,\frac{DCG}{BCF}$$

Equation 5.2-7

where MW_C is the molecular weight of carbon, 12.011 g/mol, and BCF is the biomass carbon fraction, another crop-specific constant.

The total crop biomass, on a dry basis, TCB [g/m^2], is determined by integrating CGR, from t = 0 to the time of interest, such as harvest, t_M. Or:

$$TCB = \int_0^{t_M} CGR\,dt$$

Equation 5.2-8

Total edible biomass, on a dry basis, TEB [g/m^2], may be estimated by integrating the product of CGR and the fraction of daily carbon gain allocated to edible biomass, XFRT, from time storage organs begin to form, t_E [d_{AE}]. Both XFRT and t_E are tabulated below. Thus:

$$TEB = XFRT\int_{t_E}^{t_M} CGR\,dt$$

Equation 5.2-9

Inedible biomass is the difference between TCB and TEB.

Table 5.2.32 Summary of Modified Energy Cascade Model Variables for Biomass Production

Variable	Units	Description	Reference/Value
A	--	fraction of PPF absorbed by the plant canopy	Equation 5.2-2
A_{MAX}	--	maximum value for A	0.93
BCF	--	biomass carbon fraction	Table 5.2.47
CGR	$g/m^2 \bullet d$	crop growth rate	Equation 5.2-7
C_i	varies	coefficients in functions describing t_A and CQY_{MAX}	Table 5.2.34
$[CO_2]$	$\frac{\mu mol_{CO_2}}{mol_{Air}}$	atmospheric concentration of carbon dioxide; model variable	none
CQY	$\frac{\mu mol_{C.\,Fixed}}{\mu mol_{Ab.\,PPF}}$	canopy quantum yield	Equation 5.2-3
CQY_{MAX}	$\frac{\mu mol_{C.\,Fixed}}{\mu mol_{Ab.\,PPF}}$	maximum value for CQY that applies until t_Q	Equation 5.2-10
CQY_{MIN}	$\frac{\mu mol_{C.\,Fixed}}{\mu mol_{Ab.\,PPF}}$	minimum value for CQY at t_M	Table 5.2.33
CUE_{24}	--	24-hour carbon use efficiency; a fraction	Equation 5.2-4
CUE_{MAX}	--	maximum value for CUE_{24} that applies until t_Q	Table 5.2.33
CUE_{MIN}	--	minimum value for CUE_{24} at t_M	Table 5.2.33
DCG	$mol_{Carbon}/m^2 \bullet d$	daily carbon gain	Equation 5.2-5
DOP	$mol_{O_2}/m^2 \bullet d$	daily oxygen production	Equation 5.2-6
H	h/d	Photoperiod	Table 5.2.45
MW_C	g/mol	molecular weight of carbon	12.011
n	--	an exponent	Table 5.2.31
OPF	$\frac{mol_{O_2}}{mol_{Carbon}}$	oxygen production fraction	Table 5.2.47
PPF	$\frac{\mu mol_{Photon}}{m^2 \bullet s}$	photosynthetic photon flux; model variable	none
TCB	g/m^2	total crop biomass, on a dry basis	Equation 5.2-8
TEB	g/m^2	total edible biomass, on a dry basis	Equation 5.2-9
t	d_{AE}	time; model variable	none
t_A	d_{AE}	time until canopy closure	Equation 5.2-18
t_E	d_{AE}	time at onset of organ formation	Table 5.2.46
t_M	d_{AE}	time at harvest or crop maturity	Table 5.2.46
t_Q	d_{AE}	time until onset of canopy senescence	Table 5.2.46
XFRT	--	fraction of daily carbon gain allocated to edible biomass after t_E	Table 5.2.46

The environmentally dependent parameters for these models are provided in the sections below. The MEC variables for biomass production models are summarized in Table 5.2.32. General model

constants, which depend only on the crop cultivar and not on environmental conditions, are listed in Table 5.2.33.

Table 5.2.33 Biomass Production Model Constants [179]

Crop	Specific Cultivar	CQY_{MIN} [$\mu mol_{C\ Fixed}$ /$\mu mol_{Ab.\ PPF}$]	CUE_{MAX}	CUE_{MIN}
Dry Bean	*Meso Amer. Hab. 1 – Determinate*	0.02	0.65	0.50 [180]
Lettuce	*Waldmann's Green*	n/a	0.625	n/a
Peanut	*Pronto*	0.02	0.65	0.30
Rice	*Early maturing types*	0.01	0.64	n/a
Soybean	*Hoyt*	0.02	0.65	0.30
Sweet Potato	*TU-82-155 (Tuskegee University)*	n/a	0.625	n/a
Tomato	*Reinmann Philippe 75/59*	0.01	0.65	n/a
Wheat	*Veery 10*	0.01	0.64	n/a
White Potato	*Norland or Denali*	0.02	0.625	n/a

Based on multivariable polynomial regression, the functions for maximum canopy quantum yield, CQY_{MAX} [$\mu mol_{Carbon\ Fixed}/\mu mol_{Absorbed\ PPF}$], have the general form:

$$
\begin{aligned}
CQY_{MAX}(PPF, [CO_2]) = {} & C_1 \frac{1}{PPF}\frac{1}{[CO_2]} + C_2 \frac{1}{PPF} + C_3 \frac{[CO_2]}{PPF} + C_4 \frac{[CO_2]^2}{PPF} + C_5 \frac{[CO_2]^3}{PPF} \\
& + C_6 \frac{1}{[CO_2]} + \text{Constant} + C_8 [CO_2] + C_9 [CO_2]^2 + C_{10} [CO_2]^3 + C_{11} \frac{PPF}{[CO_2]} + C_{12} PPF \\
& + C_{13} PPF [CO_2] + C_{14} PPF [CO_2]^2 + C_{15} PPF [CO_2]^3 + C_{16} \frac{PPF^2}{[CO_2]} + C_{17} PPF^2 \\
& + C_{18} PPF^2 [CO_2] + C_{19} PPF^2 [CO_2]^2 + C_{20} PPF^2 [CO_2]^3 + C_{21} \frac{PPF^3}{[CO_2]} + C_{22} PPF^3 \\
& + C_{23} PPF^3 [CO_2] + C_{24} PPF^3 [CO_2]^2 + C_{25} PPF^3 [CO_2]^3
\end{aligned}
$$

Equation 5.2-10

where C_1 through C_{25} again denote coefficients. PPF is designated in [$\mu mol/m^2 \bullet s$], while $[CO_2]$ is measured in $\left[\frac{\mu mol_{CO_2}}{mol_{Air}}\right]$. To simplify the presentation of these functions, Table 5.2.35 through Table 5.2.43 present the coefficient values for each crop in a matrix of the form presented in Table 5.2.34.

179 The parameters in this table apply independent of temperature regime, photoperiod, or planting density.

180 This suggested value is based on Wheeler (2001a) whereby growth costs are less for dry bean than for soybean and peanut.

Table 5.2.34 Format for Tables of Coefficients for Equations Employing Multivariable Polynomial Regression Fits

	1/PPF	1	PPF	PPF^2	PPF^3
$1/[CO_2]$	$1/PPF \times 1/[CO_2]$ or C_1	$1/[CO_2]$ or C_6	$PPF/[CO_2]$ or C_{11}	$PPF^2/[CO_2]$ or C_{16}	$PPF^3/[CO_2]$ or C_{21}
1	1/PPF or C_2	Constant Term	PPF or C_{12}	PPF^2 or C_{17}	PPF^3 or C_{22}
$[CO_2]$	$[CO_2]/PPF$ or C_3	$[CO_2]$ or C_8	$PPF\ [CO_2]$ or C_{13}	$PPF^2\ [CO_2]$ or C_{18}	$PPF^3\ [CO_2]$ or C_{23}
$[CO_2]^2$	$[CO_2]^2/PPF$ or C_4	$[CO_2]^2$ or C_9	$PPF\ [CO_2]^2$ or C_{14}	$PPF^2\ [CO_2]^2$ or C_{19}	$PPF^3\ [CO_2]^2$ or C_{24}
$[CO_2]^3$	$[CO_2]^3/PPF$ or C_5	$[CO_2]^3$ or C_{10}	$PPF\ [CO_2]^3$ or C_{15}	$PPF^2\ [CO_2]^3$ or C_{20}	$PPF^3\ [CO_2]^3$ or C_{25}

The coefficients for CQY_{MAX} are independent of photoperiod and planting density, and are only a weak function of temperature regime. Thus, for life support crop-growth scenarios, the CQY_{MAX} coefficients are essentially functions of the crop cultivar alone. See Cavazzoni (2001) for applicability under extreme temperature ranges.

Table 5.2.35 Maximum Canopy Quantum Yield, CQY_{MAX}, Coefficients for Dry Bean

	1/PPF	1	PPF	PPF^2	PPF^3
$1/[CO_2]$	0	0	0	0	0
1	0	4.191×10^{-2}	-1.238×10^{-5}	0	0
$[CO_2]$	0	5.3852×10^{-5}	0	-1.544×10^{-11}	0
$[CO_2]^2$	0	-2.1275×10^{-8}	0	6.469×10^{-15}	0
$[CO_2]^3$	0	0	0	0	0

Table 5.2.36 Maximum Canopy Quantum Yield, CQY_{MAX}, Coefficients for Lettuce

	1/PPF	1	PPF	PPF^2	PPF^3
$1/[CO_2]$	0	0	0	0	0
1	0	4.4763×10^{-2}	-1.1701×10^{-5}	0	0
$[CO_2]$	0	5.163×10^{-5}	0	-1.9731×10^{-11}	0
$[CO_2]^2$	0	-2.075×10^{-8}	0	8.9265×10^{-15}	0
$[CO_2]^3$	0	0	0	0	0

Table 5.2.37 Maximum Canopy Quantum Yield, CQY_{MAX}, Coefficients for Peanut

	1/PPF	1	PPF	PPF^2	PPF^3
$1/[CO_2]$	0	0	0	0	0
1	0	4.1513×10^{-2}	0	-2.1582×10^{-8}	0
$[CO_2]$	0	5.1157×10^{-5}	4.0864×10^{-8}	-1.0468×10^{-10}	4.8541×10^{-14}
$[CO_2]^2$	0	-2.0992×10^{-8}	0	0	0
$[CO_2]^3$	0	0	0	0	3.9259×10^{-21}

Table 5.2.38 Maximum Canopy Quantum Yield, CQY_{MAX}, Coefficients for Rice

	1/PPF	1	PPF	PPF^2	PPF^3
$1/[CO_2]$	0	0	0	0	0
1	0	3.6186×10^{-2}	0	-2.6712×10^{-9}	0
$[CO_2]$	0	6.1457×10^{-5}	-9.1477×10^{-9}	0	0
$[CO_2]^2$	0	-2.4322×10^{-8}	3.889×10^{-12}	0	0
$[CO_2]^3$	0	0	0	0	0

Table 5.2.39 Maximum Canopy Quantum Yield, CQY_{MAX}, Coefficients for Soybean

	1/PPF	1	PPF	PPF^2	PPF^3
$1/[CO_2]$	0	0	0	0	0
1	0	4.1513×10^{-2}	0	-2.1582×10^{-8}	0
$[CO_2]$	0	5.1157×10^{-5}	4.0864×10^{-8}	-1.0468×10^{-10}	4.8541×10^{-14}
$[CO_2]^2$	0	-2.0992×10^{-8}	0	0	0
$[CO_2]^3$	0	0	0	0	3.9259×10^{-21}

Note: The function for soybean here is identical to the function for peanut.

Table 5.2.40 Maximum Canopy Quantum Yield, CQY_{MAX}, Coefficients for Sweet Potato

	1/PPF	1	PPF	PPF^2	PPF^3
$1/[CO_2]$	0	0	0	0	0
1	0	3.9317×10^{-2}	-1.3836×10^{-5}	0	0
$[CO_2]$	0	5.6741×10^{-5}	-6.3397×10^{-9}	-1.3464×10^{-11}	0
$[CO_2]^2$	0	-2.1797×10^{-8}	0	7.7362×10^{-15}	0
$[CO_2]^3$	0	0	0	0	0

Table 5.2.41 Maximum Canopy Quantum Yield, CQY_{MAX}, Coefficients for Tomato

	1/PPF	1	PPF	PPF^2	PPF^3
$1/[CO_2]$	0	0	0	0	0
1	0	4.0061×10^{-2}	0	-7.1241×10^{-9}	0
$[CO_2]$	0	5.688×10^{-5}	-1.182×10^{-8}	0	0
$[CO_2]^2$	0	-2.2598×10^{-8}	5.0264×10^{-12}	0	0
$[CO_2]^3$	0	0	0	0	0

Table 5.2.42 Maximum Canopy Quantum Yield, CQY_{MAX}, Coefficients for Wheat

	1/PPF	1	PPF	PPF^2	PPF^3
$1/[CO_2]$	0	0	0	0	0
1	0	4.4793×10^{-2}	-5.1946×10^{-6}	0	0
$[CO_2]$	0	5.1583×10^{-5}	0	-4.9303×10^{-12}	0
$[CO_2]^2$	0	-2.0724×10^{-8}	0	2.2255×10^{-15}	0
$[CO_2]^3$	0	0	0	0	0

Table 5.2.43 Maximum Canopy Quantum Yield, CQY_{MAX}, Coefficients for White Potato

	1/PPF	1	PPF	PPF^2	PPF^3
$1/[CO_2]$	0	0	0	0	0
1	0	4.6929×10^{-2}	0	0	-1.9602×10^{-11}
$[CO_2]$	0	5.0910×10^{-5}	0	-1.5272×10^{-11}	0
$[CO_2]^2$	0	-2.1878×10^{-8}	0	0	0
$[CO_2]^3$	0	0	4.3976×10^{-15}	0	0

5.2.9.5 MODIFIED ENERGY CASCADE MODELS FOR CROP TRANSPIRATION

Following the approach in Section 5.2.9.4 for biomass production, this section focuses on a similar model to predict crop canopy transpiration. In fact, the crop transpiration model employs many of the parameters computed by the algorithm above. The model in this section was adapted from Monje (1998).

The vapor pressure deficit, VPD [kPa], is the difference between the saturated vapor pressure for air at the mean atmospheric temperature, VP_{SAT} [kPa], and the actual vapor pressure for the atmosphere, VP_{AIR} [kPa]. Or:

$$VP_{SAT} = 0.611\ e^{\left[\frac{17.4\,T_{LIGHT}}{T_{LIGHT} + 239}\right]}$$
$$VP_{AIR} = VP_{SAT} \times RH$$
$$VPD = VP_{SAT} - VP_{AIR} \qquad \text{Equation 5.2-11}$$

where T_{LIGHT} [°C] is the mean atmospheric temperature during the crop's light cycle and RH is the mean atmospheric relative humidity as a fraction bounded between 0 and 1, inclusive. Calculation of VP_{SAT} assumes that the temperature of the canopy leaves, from which transpiration originates, is equal to the mean light-cycle air temperature, T_{LIGHT}.

The gross canopy photosynthesis, P_{GROSS} [$\mu mol_{Carbon}/m^2 \bullet s$], may be expressed in terms of previously defined values as:

$$P_{GROSS} = A \times CQY \times PPF \qquad \text{Equation 5.2-12}$$

The net canopy photosynthesis, P_{NET} [$\mu mol_{Carbon}/m^2 \bullet s$], may be expressed as:

$$P_{NET} = \left[\frac{D_{PG} - H}{D_{PG}} + \frac{H \times CUE_{24}}{D_{PG}}\right] P_{GROSS} \qquad \text{Equation 5.2-13}$$

where D_{PG} [h/d] is the length of the plant growth chamber's diurnal cycle. During development of these models, Cavazzoni (2001) assumed a value of 24.0 h/d for D_{PG}, which is consistent with ground-based data gathered to date.

Table 5.2.44 Summary of Modified Energy Cascade Model Variables for Canopy Transpiration

Variable	Units	Description	Reference/Value
A	--	fraction of PPF absorbed by the plant canopy	Equation 5.2-2
$[CO_2]$	$\frac{\mu mol_{CO_2}}{mol_{Air}}$	atmospheric concentration of carbon dioxide; model variable	none
CQY	$\frac{\mu mol_{Carbon}}{\mu mol_{Photon}}$	canopy quantum yield	Equation 5.2-3
CUE_{24}	--	24-hour carbon use efficiency; a fraction	Equation 5.2-4
D_{PG}	h/d	plant growth diurnal cycle	24 [181]
DTR	$L_{Water}/m^2 \bullet d$	daily canopy transpiration rate	Equation 5.2-17
g_A	$mol_{Water}/m^2 \bullet s$	atmospheric aerodynamic conductance	Equation 5.2-15 and Equation 5.2-16
g_C	$mol_{Water}/m^2 \bullet s$	canopy surface conductance	Equation 5.2-14
g_S	$mol_{Water}/m^2 \bullet s$	canopy stomatal conductance	Equation 5.2-15 and Equation 5.2-16
H	h/d	photoperiod; model variable	none [182]
H_O	h/d	nominal photoperiod	Table 5.2.45
MW_W	g/mol	molecular weight of water	18.015
P_{ATM}	kPa	total atmospheric pressure; model variable	none
P_{GROSS}	$\frac{\mu mol_{Carbon}}{m^2 \bullet s}$	gross canopy photosynthesis	Equation 5.2-12
P_{NET}	$\frac{\mu mol_{Carbon}}{m^2 \bullet s}$	net canopy photosynthesis	Equation 5.2-13
PPF	$\frac{\mu mol_{Photon}}{m^2 \bullet s}$	photosynthetic photon flux; model variable	none
PPF_E	$\frac{\mu mol_{Photon}}{m^2 \bullet s}$	effective photosynthetic photon flux	Equation 5.2-19
RH	--	atmospheric relative humidity; model variable	none
T_{LIGHT}	°C	atmospheric temperature during crop's light cycle	Table 5.2.45
VP_{AIR}	kPa	actual moisture vapor pressure	Equation 5.2-11
VP_{SAT}	kPa	saturated moisture vapor pressure	Equation 5.2-11
VPD	kPa	vapor pressure deficit	Equation 5.2-11
ρ_W	g/L	density of water	998.23

[181] This value applies to data used to date from terrestrial test facilities. More generally, it's the length of a local sol.

[182] For the nominal case, assume the photoperiod, H, equals the nominal photoperiod, H_O, which is listed in Table 5.2.45.

The canopy surface conductance, g_C [$mol_{Water}/m^2 \bullet s$], is based on the canopy stomatal conductance, g_S [$mol_{Water}/m^2 \bullet s$], and the atmospheric aerodynamic conductance, g_A [$mol_{Water}/m^2 \bullet s$].

$$g_C = \frac{g_A \times g_S}{g_A + g_S}$$ Equation 5.2-14

The following models for g_S and values for g_A were derived from the experimental conditions studied by Monje (1998).

With planophile-type canopies, such as for dry bean, lettuce, peanut, soybean, sweet potato, tomato, and white potato, g_S and g_A are computed as:

$$g_S = \left(1.717\ T_{LIGHT} - 19.96 - 10.54\ VPD\right)\left(\frac{P_{NET}}{[CO_2]}\right)$$

$$g_A = 2.5$$ Equation 5.2-15

With erectophile canopies, such as for rice and wheat, g_S and g_A have the form:

$$g_S = 0.1389 + 15.32\ RH\left(\frac{P_{NET}}{[CO_2]}\right)$$

$$g_A = 5.5$$ Equation 5.2-16

The daily canopy transpiration rate, DTR [$L_{Water}/m^2 \bullet d$], is:

$$DTR = 3600\frac{s}{h}\ H\left(\frac{MW_W}{\rho_W}\right) g_C \left(\frac{VPD}{P_{ATM}}\right)$$ Equation 5.2-17

where P_{ATM} [kPa] is the total atmospheric pressure, MW_W is the molecular weight of water, 18.015 g/mol, and ρ_W is the density of water, 998.23 g/L at 20 °C.

The parameters for the transpiration model are provided in the sections below and the variables are summarized in Table 5.2.44.

5.2.9.5.1 MODIFIED ENERGY CASCADE MODEL CONSTANTS FOR NOMINAL TEMPERATURE REGIMES AND PHOTOPERIODS

For nominal temperature regimes and photoperiods, MEC model constants are provided here for the parameters in Section 5.2.9.4 and Section 5.2.9.5.

Note: Some values in Table 5.2.45 differ from the corresponding values listed in Table 5.2.24.

Table 5.2.45 Nominal Temperature Regimes, Planting Densities, and Photoperiods for the Plant Growth and Transpiration Models

Crop	Nominal Photoperiod H_O [h/d]	Planting Density [183] [plants/m²]	Light Cycle Temperature, T_{LIGHT} [°C]	Dark Cycle Temperature, T_{DARK} [184] [°C]
Dry Bean	12	7	26	22
Lettuce	16	19.2	23	23
Peanut	12	7	26	22
Rice	12	200	29	21
Soybean	12	35	26	22
Sweet Potato	18	16	28	22
Tomato	12	6.3	26	22
Wheat	20	720	23	23
White Potato	12	6.4	20	16

Table 5.2.46 Biomass Production Model Time Constants for Nominal Temperature Regime and Photoperiod

Crop	Fraction of Edible Biomass After t_E XFRT	Time at Onset of Edible Biomass Formation, t_E [d_{AE}]	Time at Onset of Canopy Senescence, t_Q [d_{AE}]	Time at Harvest, t_M [d_{AE}]
Dry Bean	0.97	40	42	63
Lettuce	0.95	1	n/a [185]	30
Peanut	0.49	49	65	110
Rice	0.98	57	61	88
Soybean	0.95	46	48	86
Sweet Potato	1.00	33	n/a [185]	120
Tomato	0.70	41	56	80
Wheat	1.00	34	33	62
White Potato	1.00	45	75	138 [186]

[183] Planting density affects the time to canopy closure, t_A, even though an explicit functionality is not apparent.

[184] The MEC models do not explicitly use the dark cycle temperature, but because the dark cycle temperature affects a crop's development, these values are assumed implicitly for this set of parameters.

[185] This crop is harvested before the canopy reaches senescence.

[186] White potato plants are harvested at t = 105 d_{AE}, but t_M = 138 d_{AE} is used for the models.

Table 5.2.47 Biomass Carbon and Oxygen Production Fractions for Nominal Temperature Regime and Photoperiod

Crop	Biomass Carbon Fraction, BCF	Oxygen Production Fraction, OPF [mol O_2/mol C]
Dry Bean	0.45	1.10
Lettuce	0.40	1.08
Peanut	0.50	1.19
Rice	0.44	1.08
Soybean	0.46	1.16

Crop	Biomass Carbon Fraction, BCF	Oxygen Production Fraction, OPF [mol O_2/mol C]
Sweet Potato	0.44	1.02
Tomato	0.42	1.09
Wheat	0.44	1.07
White Potato	0.41	1.02

The functions for the canopy closure time, t_A [d_{AE}], have the general form:

$$\begin{aligned} t_A(PPF_E, [CO_2]) = {} & C_1 \frac{1}{PPF_E}\frac{1}{[CO_2]} + C_2 \frac{1}{PPF_E} + C_3 \frac{[CO_2]}{PPF_E} + C_4 \frac{[CO_2]^2}{PPF_E} + C_5 \frac{[CO_2]^3}{PPF_E} \\ & + C_6 \frac{1}{[CO_2]} + \text{Constant} + C_8 [CO_2] + C_9 [CO_2]^2 + C_{10} [CO_2]^3 + C_{11} \frac{PPF_E}{[CO_2]} \\ & + C_{12} PPF_E + C_{13} PPF_E [CO_2] + C_{14} PPF_E [CO_2]^2 + C_{15} PPF_E [CO_2]^3 + C_{16} \frac{PPF_E^2}{[CO_2]} \\ & + C_{17} PPF_E^2 + C_{18} PPF_E^2 [CO_2] + C_{19} PPF_E^2 [CO_2]^2 + C_{20} PPF_E^2 [CO_2]^3 + C_{21} \frac{PPF_E^3}{[CO_2]} \\ & + C_{22} PPF_E^3 + C_{23} PPF_E^3 [CO_2] + C_{24} PPF_E^3 [CO_2]^2 + C_{25} PPF_E^3 [CO_2]^3 \end{aligned}$$

Equation 5.2-18

where C_1 through C_{25} denote coefficients. PPF_E is expressed in [µmol/m²•s], while $[CO_2]$ is measured in $\left[\frac{\mu mol_{CO_2}}{mol_{Air}}\right]$. To simplify the presentation of these functions, Table 5.2.48 through Table 5.2.56 present the coefficient values for each crop in a matrix using the form of Table 5.2.34 above.

The effective photosynthetic photon flux, PPF_E [µmol/m²•s], (Rodriguez and Bell, 2004) is:

$$PPF_E = PPF\left(\frac{H}{H_O}\right)$$

Equation 5.2-19

where values for nominal photoperiod, H_O [h/d], are tabulated in Table 5.2.45.

Table 5.2.48 Canopy Closure Time, t_A, Coefficients for Dry Bean with Nominal Conditions

	$1/PPF_E$	1	PPF_E	PPF_E^2	PPF_E^3
$1/[CO_2]$	2.9041×10^5	0	0	0	0
1	1.5594×10^3	15.840	6.1120×10^{-3}	0	0
$[CO_2]$	0	0	0	-3.7409×10^{-9}	0
$[CO_2]^2$	0	0	0	0	0
$[CO_2]^3$	0	0	0	0	9.6484×10^{-19}

Table 5.2.49 Canopy Closure Time, t_A, Coefficients for Lettuce with Nominal Conditions

	$1/PPF_E$	1	PPF_E	PPF_E^2	PPF_E^3
$1/[CO_2]$	0	0	1.8760	0	0
1	1.0289×10^{4}	1.7571	0	0	0
$[CO_2]$	- 3.7018	0	0	0	0
$[CO_2]^2$	0	2.3127×10^{-6}	0	0	0
$[CO_2]^3$	3.6648×10^{-7}	0	0	0	0

Table 5.2.50 Canopy Closure Time, t_A, Coefficients for Peanut with Nominal Conditions

	$1/PPF_E$	1	PPF_E	PPF_E^2	PPF_E^3
$1/[CO_2]$	3.7487×10^{6}	$- 1.8840 \times 10^{4}$	51.256	- 0.05963	2.5969×10^{-5}
1	2.9200×10^{3}	23.912	0	5.5180×10^{-6}	0
$[CO_2]$	0	0	0	0	0
$[CO_2]^2$	0	0	0	0	0
$[CO_2]^3$	9.4008×10^{-8}	0	0	0	0

Table 5.2.51 Canopy Closure Time, t_A, Coefficients for Rice with Nominal Conditions

	$1/PPF_E$	1	PPF_E	PPF_E^2	PPF_E^3
$1/[CO_2]$	6.5914×10^{6}	$- 3.748 \times 10^{3}$	0	0	0
1	2.5776×10^{4}	0	0	4.5207×10^{-6}	0
$[CO_2]$	0	- 0.043378	4.562×10^{-5}	$- 1.4936 \times 10^{-8}$	0
$[CO_2]^2$	6.4532×10^{-3}	0	0	0	0
$[CO_2]^3$	0	0	0	0	0

Table 5.2.52 Canopy Closure Time, t_A, Coefficients for Soybean with Nominal Conditions

	$1/PPF_E$	1	PPF_E	PPF_E^2	PPF_E^3
$1/[CO_2]$	6.7978×10^{6}	$- 4.326 \times 10^{4}$	112.63	- 0.13637	6.6918×10^{-5}
1	$- 4.3658 \times 10^{3}$	33.959	0	0	$- 2.1367 \times 10^{-8}$
$[CO_2]$	1.5573	0	0	0	1.5467×10^{-11}
$[CO_2]^2$	0	0	$- 4.911 \times 10^{-9}$	0	0
$[CO_2]^3$	0	0	0	0	0

Table 5.2.53 Canopy Closure Time, t_A, Coefficients for Sweet Potato with Nominal Conditions

	$1/PPF_E$	1	PPF_E	PPF_E^2	PPF_E^3
$1/[CO_2]$	1.2070×10^{6}	0	0	0	4.0109×10^{-7}
1	4.9484×10^{3}	4.2978	0	0	0
$[CO_2]$	0	0	0	0	2.0193×10^{-12}
$[CO_2]^2$	0	0	0	0	0
$[CO_2]^3$	0	0	0	0	0

Table 5.2.54 Canopy Closure Time, t_A, Coefficients for Tomato with Nominal Conditions

	$1/PPF_E$	1	PPF_E	PPF_E^2	PPF_E^3
$1/[CO_2]$	6.2774×10^5	0	0.44686	0	0
1	3.1724×10^3	24.281	5.6276×10^{-3}	-3.0690×10^{-6}	0
$[CO_2]$	0	0	0	0	0
$[CO_2]^2$	0	0	0	0	0
$[CO_2]^3$	0	0	0	0	0

Table 5.2.55 Canopy Closure Time, t_A, Coefficients for Wheat with Nominal Conditions

	$1/PPF_E$	1	PPF_E	PPF_E^2	PPF_E^3
$1/[CO_2]$	9.5488×10^4	0	0.3419	-1.9076×10^{-4}	0
1	1.0686×10^3	15.977	1.9733×10^{-4}	0	0
$[CO_2]$	0	0	0	0	0
$[CO_2]^2$	0	0	0	0	0
$[CO_2]^3$	0	0	0	0	0

Table 5.2.56 Canopy Closure Time, t_A, Coefficients for White Potato with Nominal Conditions

	$1/PPF_E$	1	PPF_E	PPF_E^2	PPF_E^3
$1/[CO_2]$	6.5773×10^5	0	0	0	0
1	8.5626×10^3	0	0.042749	-1.7905×10^{-5}	0
$[CO_2]$	0	0	8.8437×10^{-7}	0	0
$[CO_2]^2$	0	0	0	0	0
$[CO_2]^3$	0	0	0	0	0

For certain crops under low-lighting conditions, the relationships above for t_A and A_{MAX} require modification. Physically, the canopy does not close under low light, so A_{MAX} does not reach 0.93, for the nominal photoperiod and planting densities listed in Table 5.2.45. Thus, to use the models above under such conditions and obtain reasonably accurate results, modified values for the time at canopy closure, t_A, and the maximum fraction of PPF absorbed by the plant canopy, A_{MAX}, are required. Table 5.2.57 provides modified values for the conditions listed, where t_A is the time until the listed A_{MAX} is attained. The nominal photoperiods and planting densities associated with these values are also given for reference, and they are consistent with values provided in Table 5.2.45 above.

Table 5.2.57 MEC Model Parameters for Low-Light Conditions, Nominal Temperature Regimes

Crop	Photo-period [h/d]	Planting Density [plants/m²]	PPF [µmol/m²•s]	[CO_2] [µmol/mol]	t_A [d_{AE}]	A_{MAX}
Lettuce	16	19.2	200	330	32	0.18
				660	32	0.35
				990	32	0.46
				1,320	32	0.49
			300	330	32	0.75
Rice	12	200	200	330	45	0.13
				660	45	0.21
				990	45	0.26
				1,320	45	0.28
			300	330	50	0.33
				660	50	0.50
				990	50	0.59
				1,320	50	0.62
			400	330	50	0.57
				660	50	0.75
				990	50	0.82
				1,320	50	0.83
Sweet Potato	18	16	200	330	30	0.58
				660	30	0.76
				990	30	0.84
				1,320	30	0.86
			300	330	31	0.90
White Potato	12	6.4	200	330	36	0.34
				660	38	0.49
				990	38	0.58
				1,320	39	0.60
			300	330	40	0.80
				660	42	0.90

MEC model constants for additional temperature regimes are reported in Cavazzoni (2001).

5.3 IN-SITU RESOURCE UTILIZATION EXTERNAL INTERFACE

Significant quantities of local resources are available at Mars that might be used for life support. Sridhar, *et al.* (1998) identified some resources that might be needed. (See Table 5.3.2) Drysdale (1998) estimated very roughly the masses required for each resource and the cost leverage that seemed credible from in-situ resource utilization (ISRU) based on data from John Finn (NASA Ames Research Center). (See Table 5.3.3)

Regolith may be used for radiation and meteoroid protection at a long-term base, and would be available for the cost of moving it and bagging it.

Water would be a high leverage item, particularly if bioregeneration is used extensively. It could be available from the atmosphere, despite its dryness, from permafrost that is expected to be extensive a meter or two below the surface, from polar ice, or from subsurface water or ice deposits. It could also be made from atmospheric carbon dioxide, if a source of hydrogen is available. Even if hydrogen had to be shipped from Earth, this would still give a 5 to 1 cost advantage. The cost of acquisition would depend on the cost of extraction and purification. Currently, the abundance and location of water on Mars is undetermined. The atmosphere of Mars carries water vapor in minimal quantities. Likewise, large deposits of water exist at both Martian poles, but accessing that water is complicated by the seasonal deposition of frozen carbon dioxide on top of the ice deposits.

Atmospheric carbon dioxide could support plant growth, particularly if a plant growth unit is set up and started remotely. It could be readily extracted from the atmosphere, which is 95% carbon dioxide, though at a low pressure.

An inert gas would be needed to dilute the cabin oxygen, assuming the base air would not be pure oxygen. This could be extracted from the atmosphere by removing the carbon dioxide and water vapor.

Finally, oxygen, for crew respiration, can be obtained from the atmosphere, either by removing the rest of the gases, or by reaction with the atmospheric carbon dioxide using either a Sabatier/electrolysis or Zirconia cell reaction.

A design reference mission (Hoffman and Kaplan, 1997) proposes using local resources to make rocket propellant, liquid methane and liquid oxygen, for the Mars ascent vehicle from the Martian atmosphere. While oxygen is available as a product from splitting carbon dioxide, methane production requires a source of hydrogen. Water provides a readily used source of hydrogen, but as addressed above, it may not be readily available. The design reference mission avoids the issue of water availability by providing liquid hydrogen from Earth for ISRU propellant production.

Similar propellants could be used for power storage, including propelling surface or aerial vehicles, especially if a local source of water is available. In addition, the same chemical processing plant could be used to make life support commodities, such as listed below in Table 5.3.3. Some of these, inert gases, for example, might be made available as by-products at minimal added cost.

Note that shipped commodities will have a negative cost leverage to account for packaging. This can be a significant mass factor, as shown in Table 4.1.4 for permanent gases. This is in addition to any cost factor for the shipping location as identified in Table 3.2.1.

Table 5.3.1 Nitrogen Gas Losses Associated with International Space Station Technology

Parameter	Mass [kg/y]	Comments	Reference
Nitrogen Resupplied	796		Information from Sridhar, *et al.* (1998)
ISS Module Leakage	18 - 44		
Airlock Losses	10%	mass of nitrogen lost per cycle is 1 kg	

Table 5.3.2 Nitrogen Gas Losses for the Mars Design Reference Mission (One Cycle) Using ISS Technologies

Mission Phase	Event	Mass [kg]	per Event	Total Mass Lost [kg]	Calculation Basis	Reference
Transit	Module Leakage	0.1	day	26	260 days transit; both ways	Information from Sridhar, *et al.* (1998)
Surface	Airlock Usage	1	cycle	1,200	2 cycles/day for 619 days	
Surface	Module Leakage	0.1	day	62	619 days	
Total				**1,288**	Gas Mass Excluding Tanks	

Table 5.3.3 Estimation of Cost Leverages from In-Situ Resource Utilization [187]

Commodity	Requirement [kg]	Cost Leverage	Comments / Assumptions	Likelihood [188]
Regolith	620,000	3,100	Assumes a Rover is Available	Always
Water	12,000	310	From Local Permafrost	Unknown to Unlikely
Water	12,000	390	From Local Atmosphere	Unlikely
Water	12,000	5	Produced Using Hydrogen from Earth	Always
Carbon Dioxide	528	47	For 30 days of Plant Growth; Using Local Atmosphere	Always
Inert Gas (Argon/Nitrogen)	508	1.6	From Local Atmosphere	Always
Oxygen	121	19	From Electrolysis of Local Water	Unknown to Unlikely
Hydrogen	system dependent	1.2	From Electrolysis of Local Water	Depends on water availability

Allen and Zubrin (1999) suggest ISRU is also available on Luna, though the variety and source of commodities is more limited. Specifically, oxygen is available as an oxide within the lunar regolith. Further, though very limited in extent, water, as ice, is present in deep craters at both lunar poles.

5.4 INTEGRATED CONTROL EXTERNAL INTERFACE

5.4.1 SENSORS

Sensors are critical to life support system operation. However, based on current estimates from the ALS Systems Analysis Workshop of March 1998, the mass will not be significant compared to the overall life support system mass.

Table 5.4.1 Sensor Mass Estimates

	Assumptions [kg]			
Parameter	**lower**	**nominal**	**upper**	**References**
Low Tech	221 (1)	TBD	680 (1)	(1) Jan (1998)
High Tech	71 (1)	TBD	165 (1)	
Highest Tech	39 (1)	TBD	106 (1)	

5.5 POWER EXTERNAL INTERFACE

Within this manuscript, power enters analyses and modeling through use of a power-mass penalty. Thus, information on power systems is provided under the description of infrastructure in Section 3.2.

187 From Drysdale (1998) using data from J. Finn (NASA/Ames Research Center). These estimates are very preliminary.

188 Likelihood assesses how likely a particular commodity might be available based on current knowledge of Mars for a typical site. Assessment scale: "Always" implies availability at all sites. "Likely" implies availability at most sites in unlimited quantities. "Unlikely" implies availability at some sites in unlimited quantities, or available at most sites in limited quantities. "Unknown" implies unknown availability.

5.6 RADIATION PROTECTION EXTERNAL INTERFACE

Radiation Protection, according to Table 2.4.2, may impact numerous systems. While exotic life support designs are possible, it is likely that Radiation Protection, which is effectively mass between the crew and the external radiant environment, will remain a dedicated mass of material with a high hydrogen content such as polyethylene or, less ideally, even water. Further, vehicle structure, including the primary structure, avionics, and propulsion system can provide varying degrees of protection just due to the nature of their mass (Duffield, 2001). However, the most likely interaction for the Radiation Protection External Interface is with the Water Subsystem and then only as a contingency source.

For operations in near Earth space, hydrogen mass equivalent, as detailed in Table 3.2.7, completely around any safe haven is considered adequate for a vehicle radiation shelter to protect against solar particle events. While the initial activity from solar particle events enters from the direction of the Sun, the radiation field soon becomes effectively isotropic, so any effective radiation protection must provide a complete enclosure for the crew. This radiation shelter may include the entire crew cabin. On short duration missions, such as a lunar transit, such protection may only encompass a portion of the crew cabin, such as the sleeping quarters, due to the added mass associated with complete radiation shielding.

For longer duration missions, either for extended operations on Luna or to transit to Mars, the crew cabin must also provide protection versus galactic cosmic radiation. Again this radiation source is, by nature, isotropic. As implied above in Section 3.2.2 on infrastructure, galactic cosmic radiation is much more difficult to stop. For extended duration transit missions, all mass to protect against galactic cosmic radiation must come with the spacecraft. On a planetary surface, local resources, such as regolith packed into "sandbags" or underground caverns might be used to protect against radiation. Additionally, the carbon dioxide atmosphere of Mars, as well as the mass of the planet itself, provides some protection.

Here, Radiation Protection External Interface costs are integrated with the primary structure penalty for volume as noted above in Section 3.2.2.

5.7 THERMAL CONTROL EXTERNAL INTERFACE

Thermal control, in terms of its most direct impact on a spacecraft, maintains temperatures throughout the vehicle. Or, from another perspective, thermal energy, or heat, transfers from regions of high temperature to regions of low temperature and the thermal control hardware regulates when and how thermal energy transfers from regions of high temperature within the spacecraft to regions of low temperature outside of the spacecraft so that all components within the spacecraft are maintained between their prescribed temperature limits. As a distinguishing attribute, thermal control does not directly address heating associated with aerodynamic drag, although aerodynamic heating may impose greater thermal loads for the thermal control hardware, such as when heat conducts through the vehicle structure and into the crew cabin. Heating generated by aerodynamic drag is managed by the thermal protection system.

5.7.1 HEAT TRANSFER MECHANISMS

In order to appreciate heat management technology, some background in the underlying mechanisms is beneficial. Thus, a brief discussion of heat transfer mechanisms follows. Please see Incropera and DeWitt (1985), the primary reference for this section, for a more thorough discussion.

Physically, heat transfers from high to low temperature via one of three distinct mechanisms. These mechanisms are conduction, convection, and radiation, although heat transfer with a phase change is sometimes discussed separately and thus might be viewed as a fourth heat transfer mechanism [189].

5.7.1.1 CONDUCTION

Conduction describes the transfer of heat within matter by diffusion, or heat transfer through matter in the absence of macroscopic bulk motion of the matter. An example is heat moving up the shaft of a metal spoon sitting in a heated pot on a stove. The thermal energy, which is expressed as vibrational, rotational, and translational energy on atomic scales, is transferred from more-quickly vibrating atoms

[189] As noted below, phase change represents a special case of one of the three heat transfer mechanisms with the additional stipulation that one of the participating materials changes its physical state as a result of gaining or losing heat. However, even though phase change is not a unique mechanism, it is sometimes useful to distinguish heat transfer operations with phase change from other heat transfer operations.

closer to the heated surface to less-quickly vibrating atoms further from the heated surface by interactions between adjacent atoms.

5.7.1.2 CONVECTION

Convection describes the transfer of heat in which matter acquires heat, by close molecular interaction, such as is described above for conduction, and then bulk motion of that matter carries both the matter and thermal energy away from its location of origin. For example, heat may diffuse from hotter metal to an adjacent cooler moving fluid, and then the bulk motion of the moving fluid carries the heat away from its origin. Likewise, the reverse process, that of transferring heat from a hot moving fluid to a cooler solid, is also convection.

5.7.1.3 RADIATION

Radiant heat transfer is an exchange of heat between two surfaces without any intervening matter. Specifically, heat transfers from one surface to another surface that it can "see" simply by virtue of a temperature difference between the two surfaces. In a perfect vacuum, which is approximated in free space, no intervening matter is present to convey heat from one surface to another by either conduction or convection, yet heat does transfer from a hotter surface to a cooler surface via electromagnetic waves in the mechanism called radiation. Warm spacecraft reject their thermal loads from relatively hot surfaces to relatively cold space by radiant heat transfer. Please note that while radiation also describes the mechanism by which other forms of energy, such as solar particles and x-rays, pass through a vacuum, thermal radiation merely transfers heat and has no additional mutagenic effect on biological creatures exposed to it. Also please note that while radiant transfer is generally of the greatest importance in a vacuum, radiant transfer occurs in all situations where two surfaces that can "see" each other are at different temperatures, even if, for example, a fluid fills the gap between those two surfaces and heat is transferred to or from the surfaces also by conduction and/or convection. [190]

5.7.1.4 HEAT TRANSFER WITH PHASE CHANGE

Phase change describes heat transfer when matter accepts or discharges heat and changes its physical state. Thus, though it is mentioned here separately, phase change is really a specialized case of one of the three heat transfer mechanisms in which matter changes state. As an example, when water boils in a stovetop pan, liquid water approaches the bottom of the heated pan and leaves in the form of steam bubbles after accepting heat. Thus, this is really heat transfer by convection with the matter undergoing bulk motion and changing its state from liquid to vapor upon accepting heat from the solid. Likewise, phase change may occur in situations without bulk motion, such as when butter melts between two slices of hot bread, which is an example of conduction with phase change of a participating conducting material.

5.7.2 THERMAL CONTROL ORGANIZATION

Thermal control may be subdivided in several ways. One organization classifies thermal control as either passive or active. Passive thermal control hardware encourages or inhibits heat transfer as the heat passes directly through the hardware and eventually to the external environment, radiating from the vehicle's entire external surface. Active thermal control hardware acquires thermal loads near where the loads are generated and then transports those loads to some other portion of the vehicle before the loads are discharged to the environment by specifically designed radiating surfaces.

---

[190] Within a pressurized crew cabin, though all three heat-transfer mechanisms are active, conduction and/or convection usually dominate compared to radiant exchange. Physically, the driving potentials for conduction and convection heat transfer are proportional to the simple difference in temperature, while the driving potential for radiant heat transfer is proportional to the difference in temperature to the fourth power. Within the crew cabin, coupled with appropriate transport properties, conduction and convection are greater in magnitude than corresponding radiant exchanges. Thus, within a crew cabin, analysts often neglect radiant exchange with only a minor loss in accuracy. As a cautionary note, there are situations, especially within terrestrial industry, in which radiant exchange is significant or dominates as the preferred heat transfer mechanism even when conduction and/or convection are also viable modes. Please see Incropera and DeWitt (1985) for a more expansive discussion.

5.7.2.1 PASSIVE AND ACTIVE THERMAL CONTROL

Thermal control hardware may be classified as either passive or active. As outlined below, passive thermal control hardware is generally integrated into the vehicle structure and retards the flow of thermal energy either in to or out of the vehicle. Active thermal control hardware acquires thermal loads at or near their point of generation and transports those loads to the exterior of the vehicle for rejection.

5.7.2.1.1 PASSIVE THERMAL CONTROL

Passive thermal control hardware controls heat leakage from the vehicle and maintains cabin walls within prescribed temperature bounds. Passive thermal control hardware is deployed within the vehicle structure and generally takes the form of insulation and resistive heaters. Insulation impedes the transfer of heat either in to and out of the vehicle, while resistive heaters allow active control of the wall temperatures when completely passive approaches are inadequate. Because passive thermal control hardware is generally incorporated into the vehicle structure, it is included within mass penalties for the vehicle structure.

5.7.2.1.2 ACTIVE THERMAL CONTROL

Active thermal control hardware removes excess thermal loads from within the vehicle to the environment by physically transporting those loads from their site of generation to an appropriate rejection site. Active thermal control is comprised of three basic processes. These are acquisition of thermal energy, transport of thermal energy, and rejection of thermal energy. Acquisition hardware is comprised of fans, coldplates, and condensing heat exchangers for primary functionality. Transport hardware can, theoretically, use any mechanism. Historically for human spacecraft, transport relies on a liquid working fluid constrained within an enclosed flow channel, using the convection heat transfer mechanism to take loads from acquisition devices and to release loads to rejection devices.[191] Using this architecture, transport hardware consists of fluid tubes or pipes, pumps, accumulators, and valves. The working fluid may be two-phase, but historically NASA has employed single-phase working fluids. Finally, rejection hardware may be radiators, devices that reject expendable materials carrying thermal loads, such as a flash evaporator or a sublimator, or phase change devices such as packages containing phase change materials. Thermal control infrastructure penalties generally represent active thermal control hardware.

5.7.2.2 GENERAL THERMAL CONTROL ARCHITECTURE

Active thermal control may be divided into internal thermal control and external thermal control. In this arrangement, the internal thermal control system[192] (ITCS) initially acquires thermal loads from the crew cabin. The ITCS transports the thermal loads and releases them to a heat exchanger common to both the ITCS and the external thermal control system (ETCS).[193] The ETCS acquires thermal loads from the heat exchanger in common with the ITCS and from heat sources outside the crew cabin. The ETCS transports the combined heat loads to the vehicle heat rejection devices.

This architecture, using an ITCS with an ETCS, allows a non-toxic working fluid to circulate in all thermal control hardware located inside the crew cabin while allowing a more appropriate fluid, from an engineering perspective, to be used in thermal control hardware outside the crew cabin. With recent NASA vehicles, such as the Shuttle Orbiter and International Space Station, the ITCS working fluid is water, which is non-toxic and has ideal properties for transporting thermal loads, except that it has a relatively high freezing point compared to the external environment in low-Earth orbit. The Shuttle Orbiter and International Space Station both use more toxic working fluids in their ETCS that have lower freezing point

---

191 It is possible to envision thermal transport using either conduction or radiant heat transfer. For short distances, relatively small thermal loads, or even highly temperature-tolerant equipment, conduction via solid material pathways to the exterior of the vehicle is possible. In fact, passive thermal control uses conduction as its transport mechanism through the vehicle structure. Radiant transport mechanisms are also possible, but less likely, within a vehicle because convective heat transfer within a working fluid is generally more efficient for relatively small temperature differences associated with temperature variations within a vehicle than is radiant heat transfer.

192 Likewise, this may be designated as the "internal thermal control subsystem."

193 At assembly complete, International Space Station also uses the terminology "internal thermal control system" for its corresponding water coolant loops. However, the corresponding International Space Station "external thermal control system" is referred to as the "external active thermal control system" (EATCS). Combined, the ITCS and EATCS are the "active thermal control system" (ATCS).

temperatures. The Shuttle Orbiter uses Freon 21 while International Space Station relies on anhydrous liquid ammonia.

While this architecture, using an ITCS with an ETCS, allows use of more toxic, freeze-resistant working fluids in the ETCS while circulating a non-toxic fluid in the ITCS, this approach carries additional expenses compared with a system using a common loop to both acquire thermal loads from the crew cabin and reject them to the external environment. In particular, a thermal control system using both an ITCS and an ETCS has the added mass of the heat exchanger common to the ITCS and ETCS plus the added mass of an additional pump for the additional loop. Noting that both the Shuttle Orbiter and International Space Station use two ITCS and two ETCS loops, for redundancy, this arrangement actually adds two extra heat exchangers and two extra pump packages. Further, while the ITCS and ETCS loops are cross-linked or plumbed in a manner that any heat load may be acquired and rejected by either of the two loops serving a particular location in the spacecraft, loss of either an ITCS loop or an ETCS loop degrades the overall heat transport and rejection capabilities of the thermal control system. Thus, the additional inherent complexity actually reduces overall system reliability.

5.7.2.2.1 INTERNAL THERMAL CONTROL SYSTEM

The internal thermal control system (ITCS) acquires thermal loads from thermal acquisition sites within the crew cabin and transports those loads to a heat exchanger in contact with the ETCS. The ITCS acquires thermal loads through specified interfaces. These interfaces are usually coldplates, where the heat loads are cooled by conduction through the hardware's external structure, or heat exchangers, where the heat loads are initially cooled by convection to a working fluid. In the second case, the most common working fluid within a crew cabin is the enclosed atmosphere because many heat loads release their waste heat to the cabin atmosphere either by convection or radiant transfer. Gas-liquid heat exchangers transfer the atmospheric heat loads to the ITCS.

Cabin atmospheric thermal loads are removed by the gas-liquid heat exchanger through two approaches. Sensible heat is released from cabin atmospheric gases by convection to the gas-liquid heat exchanger. Latent heat is released by condensing water vapor, also called humidity, from the cabin atmospheric gases, removing both humidity and thermal energy by convection with phase change.

Though removal of sensible and latent thermal loads from the cabin atmosphere is a necessary function, because the cabin atmospheric gases and extracted condensate are involved in this process, it is possible that the cabin condensing heat exchanger may organizationally be grouped in whole or in part outside of the Thermal Subsystem even though the underlying processes remove heat. For completeness, here the condensing heat exchanger is grouped with the Thermal Subsystem.

5.7.2.2.2 EXTERNAL THERMAL CONTROL SYSTEM

The external thermal control system (ETCS) acquires thermal loads from the ITCS and from thermal acquisition sites outside of the crew cabin. Because the equipment outside of the crew cabin is almost universally in an unpressurized environment, thermal acquisition interfaces are almost universally coldplates. The ETCS rejects thermal loads to the environment using specified heat rejection devices, such as radiators, phase change devices, and devices that reject expendable materials carrying thermal loads. Mixing warm and cooled working fluid in the return line adjusts the temperature of the ETCS working fluid returning from the heat rejection suite to a prescribed set-point temperature. While the heat-rejection suite thermally cools working fluid, warm working fluid is routed around the heat rejection suite using a flow bypass as necessary to meet the set-point temperature for the ETCS heat acquisition devices.

Figure 5.7.1 illustrates the interrelationship between the various component definitions for the ATCS. The ITCS, denoted in black with plain type, acquires thermal loads within the crew cabin and rejects those thermal loads to the ETCS. The ETCS, denoted in green with italicized type, acquires thermal loads from the ITCS and equipment outside of the crew cabin and rejects those thermal loads to the environment.

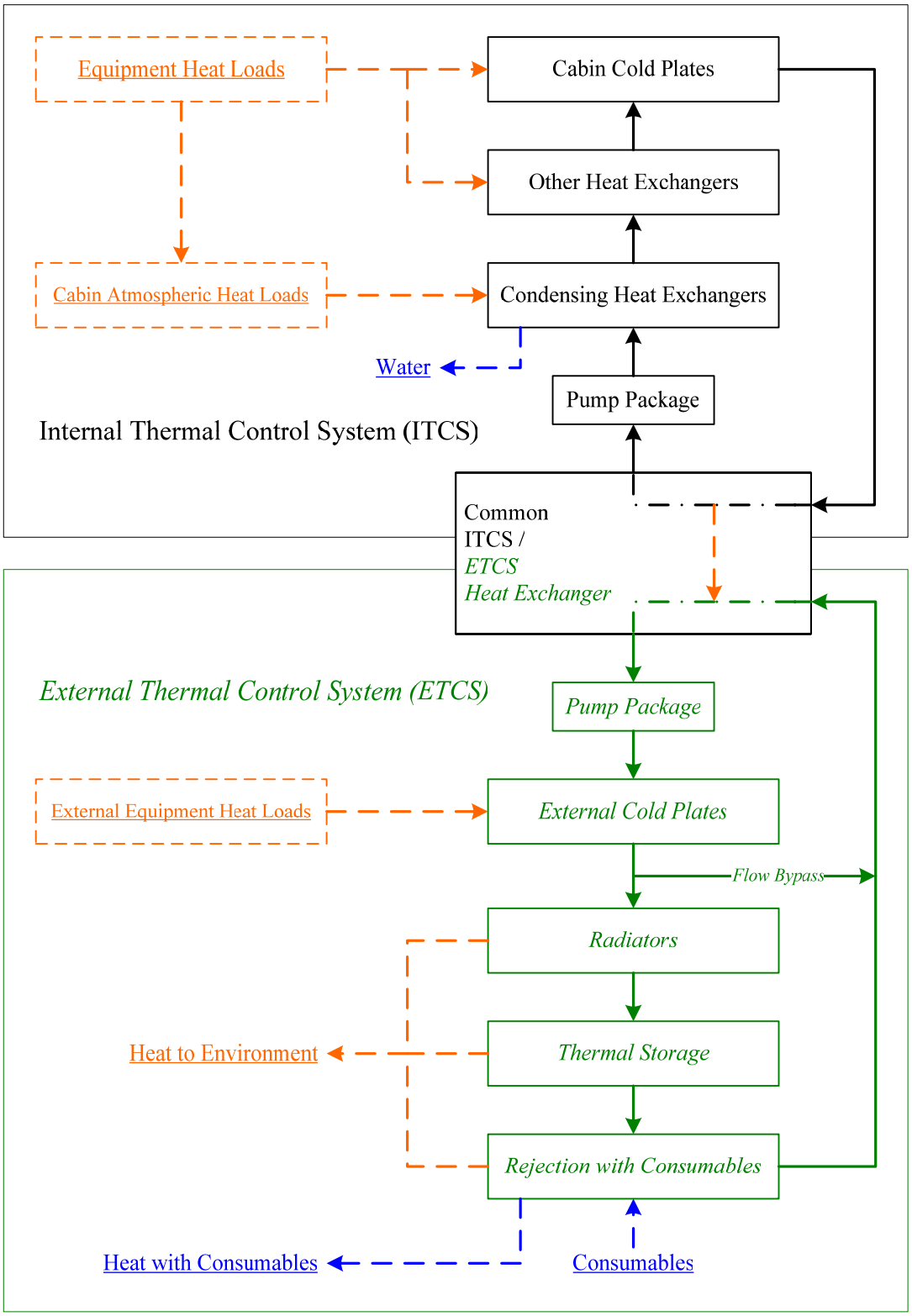

Figure 5.7.1 Active thermal control system component definitions.

5.7.3 THERMAL CONTROL TECHNOLOGY

5.7.3.1 HISTORICAL THERMAL CONTROL APPROACHES

While all NASA human-rated vehicles to date have used thermal control hardware to control the crew cabin atmospheric temperature and humidity, recent concerns over safety prohibit all but the most recent designs. In particular, some older spacecraft, such as Apollo, used a mixture of ethylene glycol with water as a working fluid within an active thermal control system loop that entered the crew cabin. Recent flight rules strongly advise against using ethylene glycol in any application within a vehicle in which a crewmember may contact it. Thus, the discussion of historical thermal control approaches is limited to designs for the Shuttle Orbiter and the International Space Station.

5.7.3.1.1 SHUTTLE THERMAL CONTROL

Figure 5.7.2 shows the ordering of components for one of two ETCS loops in a Shuttle Orbiter. A mechanical pump package, with two identical units plumbed in parallel, drives the single-phase Freon 21 working fluid. For this application, one pump is active and the second is a spare. The accumulator sets the low pressure for the fluid loop. When the working fluid contracts, the accumulator adds fluid, and when the working fluid expands, the accumulator stores any excess fluid. Because even liquid material properties are not truly invariant to temperature variations, the accumulator most often compensates for working fluid density variations associated with temperature changes.

The Shuttle was designed to reject heat through several means depending on the mission segment. On the launch pad and after the ground crew can make connections following landing, the ETCS rejects heat to ground facilities through the ground service equipment heat exchanger. On launch, re-entry, and when necessary on-orbit, the flash evaporator allows excess water to evaporate from the outside of the ETCS working fluid line, expelling the vapor, with its waste heat, to space. Upon re-entry, when the external atmospheric pressure is too great to operate the flash evaporator efficiently, the ammonia boiler evaporates anhydrous ammonia to cool the ETCS working fluid lines, again expelling the vapor to the environment. [194] The radiators, which are mounted on the inside of payload bay doors, reject heat by radiant transfer to space while the Shuttle is on-orbit. Shuttle controls the ETCS working fluid temperature from the radiators with a bypass loop as depicted. Varying internal flowrates or expendable fluid consumption rates controls the other heat rejection devices.

Heat is gathered by the ETCS from many sites throughout the vehicle. Those listed as heat exchanger are liquid/liquid devices where the second operating fluid is the coolant for the attached hardware. The water/Freon interchanger is the common ITCS/ETCS heat exchanger, while the oxygen restrictor is a heat exchanger between the ETCS loop and the pressurized cabin oxygen supply.

---

[194] In practice, the ammonia boiler is rarely used as designed. Rather, just before the radiators are removed from service by closing the payload bay doors, the Shuttle flies an attitude so that the radiators face deep space. This maneuver fills the radiator panels with chilled Freon 21 and chills the metallic panels as well. Following this maneuver, the radiators are completely bypassed and the flash evaporator rejects the entire vehicle thermal load. When the flash evaporator ceases operations high in the atmosphere, flow through the now-stowed radiators is re-established, releasing the previously cooled working fluid. This approach provides sufficient cooling from when the flash evaporator ceases operations until about 15 minutes after touch down. If all proceeds on schedule, the ground-cooling cart that interfaces with the ground service equipment heat exchanger is operational by 15 minutes after touch down, and the ammonia boiler is not used. The ammonia boiler is provided on each mission as a contingency for heat rejection, and would provide primary cooling if the ground-cooling cart was not available in time or the Shuttle executed a launch abort.

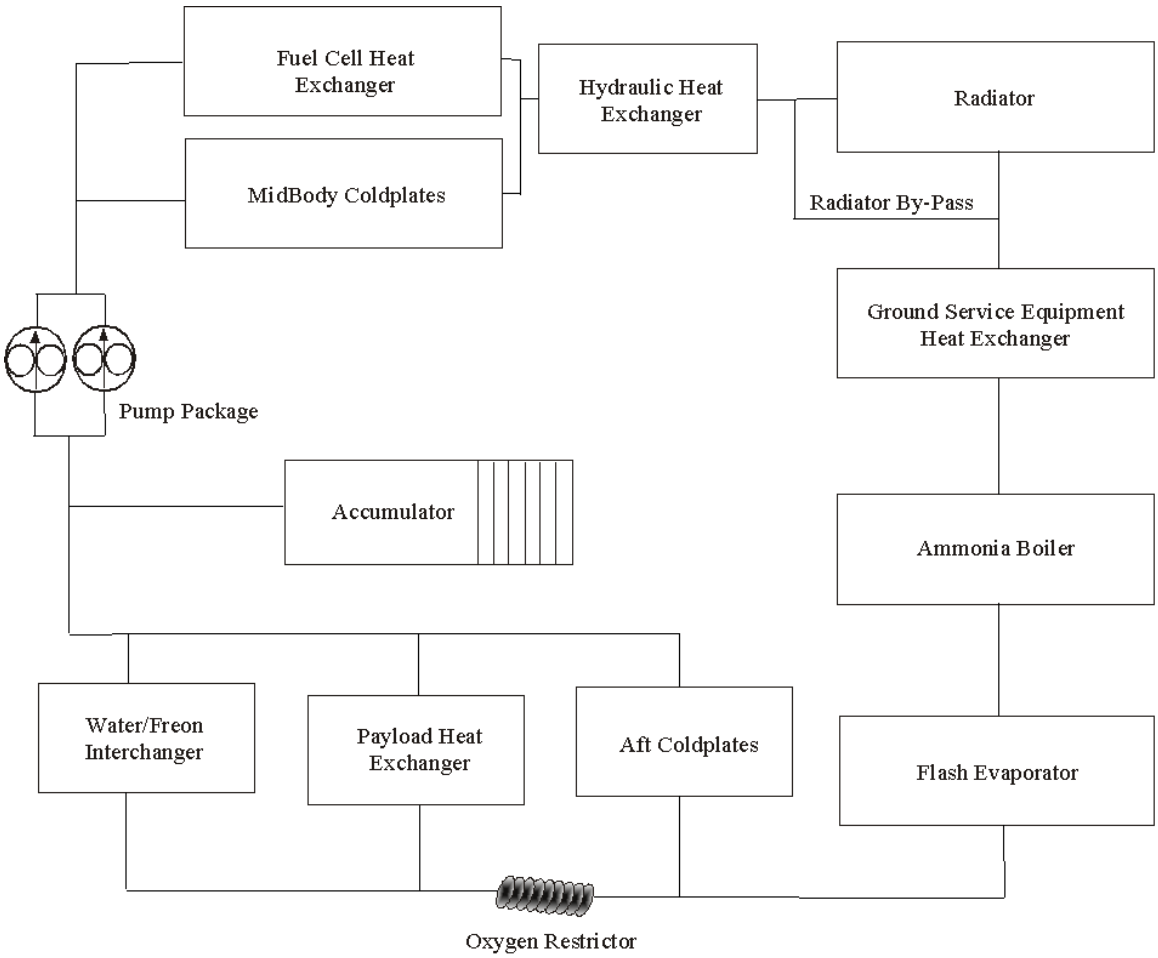

Figure 5.7.2 Active thermal control system hardware for the Shuttle Orbiter.

Figure 5.7.2 presents one of two Freon 21 loops in the Shuttle Orbiter ETCS. Coolant flow is clockwise. Because the ETCS loops run through an unpressurized portion of the vehicle, the heat exchangers are integral with the devices they cool. The Water/Freon Interchanger and the Oxygen Restrictor are heat exchangers between the ITCS water loop and the pressurized cabin oxygen supply, respectively. The Accumulator maintains pressure within the flow loop. The Radiator, Ground Service Equipment Heat Exchanger, Ammonia Boiler, and Flash Evaporator are all heat rejection devices.

5.7.3.1.2 INTERNATIONAL SPACE STATION THERMAL CONTROL

The external active thermal control system (EATCS) for ISS at Assembly Complete is very similar to the architectures presented above. The ISS EATCS uses single-phase, anhydrous liquid ammonia as its working fluid, although the corresponding ITCS uses water. The radiators are mounted on booms that connect to the P1 and S1 [195] truss segments through a thermal radiator rotary joint (TRRJ). The TRRJs orient the radiator panels so that they display their thinnest face, their "edges," to the Sun, allowing their radiant face-sheets to be exposed only to relatively cooler environments [196]. While not depicted in Figure 5.7.3, many of the fine details are similar to those in earlier diagrams.

---

[195] The ISS truss segments are numbered in ascending order from the center of the vehicle. The S0, "starboard zero," truss segment forms the base for the other truss segments and connects directly to the other ISS modules through the U. S. Laboratory. The first starboard segment outboard of S0 is S1, while the first port segment outboard is P1, or "port one."

[196] In rare situations, the TRRJs are not able to completely orient the radiator edges at the Sun, but this case is not common and only occurs for brief periods.

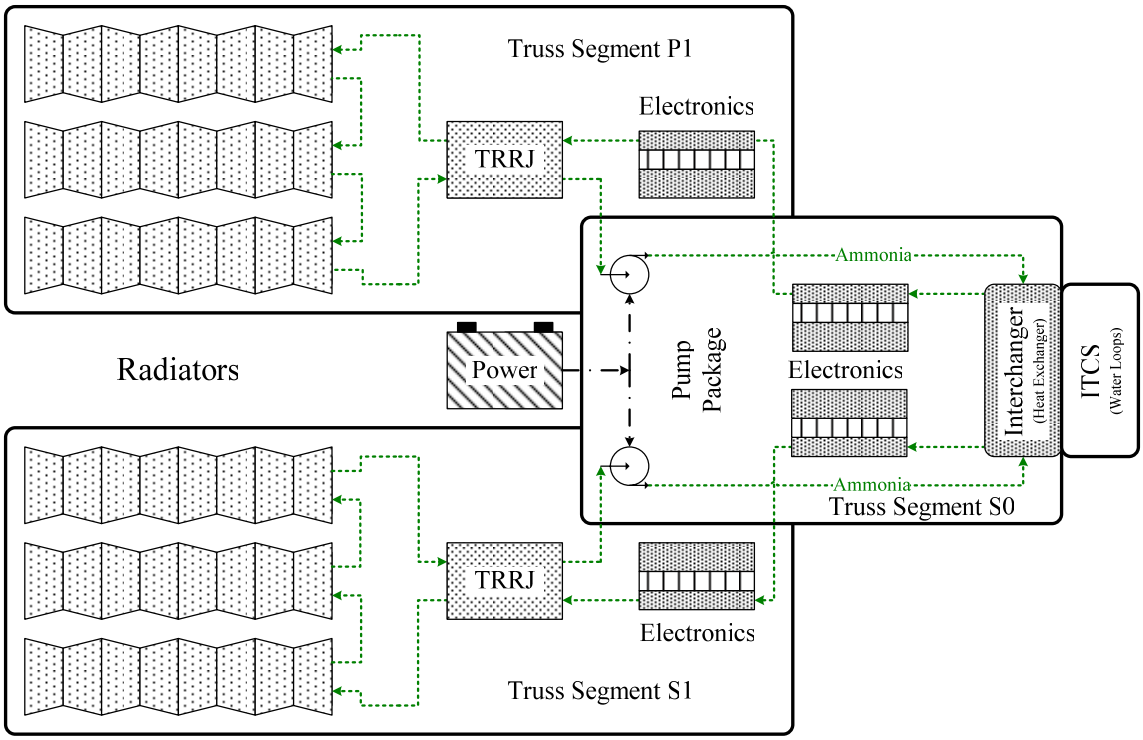

Figure 5.7.3 External active thermal control system hardware for International Space Station at Assembly Complete.

As noted by the arrows in Figure 5.7.3, ammonia flows from radiators to the common ITCS/EATCS heat exchanger and then to the warmer thermal loads associated with electronics mounted on coldplates. Each Thermal Radiator Rotary Joint (TRRJ) rotates to position the radiator panels so that they face anti-Sun, or "edge-on" to the Sun. The bulk of the EATCS is located on truss segments S0, S1, and P1.

5.7.3.2 Advanced Thermal Control Approaches

There are many concepts to increase the efficiency of thermal control hardware, and several of the more common ideas are summarized in the paragraphs below. Please, note, however, that this is not an exhaustive discussion and other viable approaches exist.

As noted above, the active thermal control system (ATCS) is the summation of both the ITCS and ETCS [197]. Further, dividing the ATCS into two loops when, physically, only one loop is required, adds inefficiency to the process of removing thermal loads from the vehicle even when there are benefits from this approach. An alternate approach employs only a single ATCS loop in place of each ITCS / ETCS combination. The working fluid requirements are more stringent because the working fluid may not be a significant hazard to the crew if leaked into the crew cabin, nor may it be overly susceptible to freezing when flowing through heat rejection equipment. While not employed currently, such systems are under development and the concept is mentioned here as background.

Another possible advanced concept is a two-phase thermal control working fluid. Thermal control loops using single-phase working fluids rely on the heat capacity of the working fluid to accept and transport thermal loads. However, single-phase working fluids are limiting in practice because acquiring a thermal load raises the temperature of the working fluid, so hardware downstream must reject their thermal loads to a working fluid at a higher temperature than hardware upstream, and this concern can lead to other inefficiencies. Secondly, a single-phase working fluid generally can acquire less heat over its entire liquid temperature range than is required to change the phase of the same mass of working fluid from a liquid to a vapor. If the thermal control working fluid is allowed to vaporize as it acquires thermal loads, the working

[197] Or the "external active thermal control system" (EATCS) when using International Space Station nomenclature.

fluid remains at a constant temperature and actually less fluid mass is required to carry the same thermal load. Issues associated with two-phase flows under non-terrestrial gravitational fields remain as challenges to this approach so far.

Heat pumps also offer promise as advanced thermal control technologies. While terrestrial heat pumps move heat either into or out of a volume, heat pumps as part of an advanced thermal control system move heat from the vehicle to the environment only. Specifically, heat pumps use work, either thermal or mechanical, to raise the temperature of waste heat loads so as to increase the ease of rejecting those loads by radiant heat transfer. While heat pumps add hardware and use power, the increased temperature of the heat load for radiant emission from the vehicle decreases the required radiator size so that the overall system may be less massive than a thermal control system without a heat pump.

5.7.4 RADIANT ENERGY BALANCE

Heat transfer is a broad topic and any in depth treatment is beyond the scope of this document. See, for example, a heat transfer text such as Incropera and DeWitt (1985) for a more complete introduction. However, several definitions and assumptions are common when analyzing radiant heat transfer for space applications within NASA. Except as specifically noted the development below follows Incropera and DeWitt (1985).

In general, heat emitted by a perfectly black body, q_{bb} [W], may be described by the Stefan-Boltzmann equation.

$$q_{bb} = \sigma A T^4 \qquad \text{Equation 5.7-1}$$

where σ is the Stefan-Boltzmann constant with a value of 5.67×10^{-8} W/(m²•K⁴), A is the body's surface area [m²], and T is the body's absolute temperature [K]. A black body is a perfect emitter and its emittance is a function only of its temperature once its geometry is fixed.

In practice, most real surfaces are not perfect emitters, and their surface emittance may be described as some fraction of the emittance from a perfectly black body. For a non-ideal body whose emittance fraction is constant, a slightly modified relation applies.

$$q_e = \sigma \varepsilon A T^4 \qquad \text{Equation 5.7-2}$$

where q_e is emittance [W], and ε is the emissivity or the fraction of the surface's actual emittance compared to its ideal or black body emittance at its current absolute temperature, T. Alternately, ε is unity only for an ideal or black body.

As noted earlier, radiant exchange of thermal energy does not depend on intervening matter for transfer. Rather, radiant exchange is possible between any two surfaces with a view of each other. Physically, according to one theory, thermal energy transfers between the surfaces via electromagnetic waves. [198] According to classic physics, thermal radiation, which is a subset of a broader phenomenon know as electromagnetic radiation, varies between wavelengths of 0.1 and 100 μm. Visible light, according to the human eye, is confined to a range varying from 0.40 to 0.70 μm. In addition to visible radiation, classic physics defines thermal radiation at wavelengths less than 0.40 μm is also ultraviolet radiation, and thermal radiation at wavelengths greater than 0.70 μm is also infrared radiation. As context, electromagnetic radiation at wavelengths less than 0.1 μm is classified, depending on its wavelength, as ultraviolet radiation [199], x-rays, or gamma rays. Electromagnetic radiation at wavelengths immediately greater than 100 μm is classified as microwaves.

When thermal radiation strikes a solid object, it may be absorbed, reflected from the surface, or transmitted through the object. If the surface is opaque to the incident radiation, transmittance is zero and only absorbance or reflectance is possible.

$$\alpha + \rho = 1 \qquad \text{Equation 5.7-3}$$

---

198 Alternate theories describe the transfer via photons or quanta, but the image of an electromagnetic wave is most applicable to the current discussion.

199 Ultraviolet radiation varies from 0.01 to 0.40 μm, and so overlaps the range classified as thermal radiation.

where α is the absorptivity and ρ is the reflectivity. For an ideal or black body, reflectivity is zero and absorptivity is unity.

At any given wavelength, λ, according to Kirchhoff's Law, absorptivity and emissivity are equal for a particular surface if (1) the incident irradiation is invariant with respect to direction, or diffuse, and (2) the surface properties are invariant with respect to direction, or diffuse.

$$\alpha_\lambda = \varepsilon_\lambda \qquad \text{Equation 5.7-4}$$

Additionally, if (3) the incident irradiation is diffuse and if (4) the surface properties, the absorptivity and emissivity, are independent of wavelength, λ, the surface is called a gray surface.

$$\alpha = \varepsilon \qquad \text{Equation 5.7-5}$$

While most real surfaces do not abide by this final requirement to qualify as gray surfaces, many are effectively gray over some subset of the range of thermal radiation. At Johnson Space Center, two thermal radiation sub ranges are often defined for radiant transfer calculations (Conger and Clark, 1997). Thermal irradiation between 0.25 µm and 2.5 µm, inclusive, is designated as solar thermal radiation (AZ Technology, 1993), while thermal irradiation above 2.5 µm is designated as infrared thermal radiation. Over each of these sub ranges, material surface properties are assumed gray.

$$\alpha_s = \varepsilon_s$$
$$\alpha_{ir} = \varepsilon_{ir} \qquad \text{Equation 5.7-6}$$

where the subscript "s" denotes surface properties over the range of solar thermal radiation and the subscript "ir" denotes surface properties over the range of infrared thermal radiation. This does not imply that α_s equals α_{ir} or that ε_s is equal to ε_{ir}. This approach effectively considers Equation 5.7-5 applicable in a piecewise manner over two sub ranges for thermal radiation.

Physically, except during re-entry or similar operations with extremely high aerodynamic drag, the surface temperatures of spacecraft in space do not approach the range where surfaces emit in the solar range. Thus, surface emissions from spacecraft, planetary surfaces, and other non-glowing physical bodies have surface properties as defined by the second relation in Equation 5.7-6. Irradiation coming from the Sun, or reflected irradiation that originated from the Sun, however, emit in the solar range. Thus, incident or reflected irradiation from the Sun uses surface properties as defined by the first relation in Equation 5.7-6.

From the perspective of a spacecraft, which emits infrared thermal radiation but likewise absorbs incident solar thermal radiation, it is meaningful to define the ε_{ir}, for both infrared thermal emittance and absorptivity, and α_s, for solar thermal absorptivity.

5.7.5 THERMAL CONTROL VALUES

This section provides values necessary to estimate heat transfer both within a spacecraft and between a spacecraft and its environment. In fact, many values below may apply both to thermal control within a spacecraft as well as to heat rejection from the spacecraft.

Table 5.7.1 presents solar absorptivities and infrared emissivities for several common aerospace structural materials. The end-of-life properties reflect changes associated with external usage in near-Earth space, and are not applicable within the crew cabin. While surfaces within the crew cabin certainly wear, aging mechanisms differ from those in the vacuum of space or even on the Martian surface. Thus, as a first approximation emissivities for new materials apply even for a used interior.

Table 5.7.1 Surface Optical Properties for Common Exterior Space Material

	New		End-of-Life [200]		
Material	α_s	ε_{ir}	α_s	ε_{ir}	**References**
Silverized Teflon	0.07	0.80	0.14	0.80	From Conger and Clark (1997) unless otherwise noted.
Aluminized Teflon	0.12	0.80	0.20	0.80	
Ortho Fabric [201]	0.18	0.84			
Beta Cloth	0.26	0.90			
A276 White Paint	0.28	0.87	0.36	0.90	
Clear Anodized Aluminum	0.38	0.83	0.58	0.79	
Gold Anodized Aluminum	0.55	0.81	0.63	0.81	
Black Anodized Aluminum	0.81	0.88	0.84	0.79	
Alodine Aluminum	0.45	0.35			
Bare Stainless Steel	0.42	0.11			
Sand-Blasted Stainless Steel	0.58	0.38			
Bare Titanium	0.52	0.12			
Tiodized Titanium	0.82	0.51			

Within the crew cabin, thermal considerations are dictated by two concerns. The first is crew comfort and maintaining equipment within its thermal bounds. The second concern is to maintain humidity within an acceptable range. If the overall cabin atmospheric temperature drops below the local dew-point temperature, allowing water vapor to condense. Because liquid water poses a significant hazard to electronics especially in weightless situations, maintaining cabin atmospheric and humidity within prescribed limits is important. Table 5.7.2 presents applicable thermal limits from current ELS requirements (ALS RD, 2003).

Table 5.7.2 Crew Cabin Thermal Ranges

		Assumptions			
Parameter	**Units**	**lower**	**nominal**	**upper**	**References**
Air Temperature [202]	K	291.5		299.8	From ALS RD (2003) unless otherwise noted
Dew-Point Temperature	K	277.6		288.7	
Relative Humidity	%	25		70	
Ventilation	m/s	0.076		0.347	

Transport properties for several common thermal control working fluids are tabulated in Table 5.7.3 at likely operating temperatures. These values support basic thermal loop energy balances.

[200] These values apply to external applications only because aging and wear mechanisms within the crew cabin differ considerably from external aging and wear mechanisms. As a first approximation, surface properties for materials within the crew cabin do not change with time.

[201] The exterior fabric on the extravehicular mobility unit.

[202] The cabin "dry bulb" atmospheric temperature.

Table 5.7.3 Transport Properties for Common Thermal Control Loop Working Fluids

		Temperature = 280.0 K			Temperature = 297.0 K			Temperature = 300.0 K			
Fluid	**Hazards**	**Density [kg/m³]**	**Specific Heat [kJ/kg•K]**	**Viscosity [kg/m•s]**	**Density [kg/m³]**	**Specific Heat [kJ/kg•K]**	**Viscosity [kg/m•s]**	**Density [kg/m³]**	**Specific Heat [kJ/kg•K]**	**Viscosity [kg/m•s]**	**References**
Water		1,002.08	4.204	0.00148				998.35	4.187	0.00083	From Schoppa (1997) unless noted otherwise.
30 % Ethylene Glycol / 70 % Water	Irritant	1,042.15	3.741	0.00311				1,033.34	3.788	0.00176	
60 % Ethylene Glycol / 40 % Water	Irritant	1,083.84	3.130	0.00796				1,071.70	3.216	0.00417	
30 % Propylene Glycol / 70 % Water		1,027.79	3.800	0.00542				1,018.36	3.861	0.00212	
60 % Propylene Glycol / 40 % Water		1,050.18	3.264	0.02090				1,036.12	3.369	0.00710	
30 % Glycerin / 70 % Water					1,072	3.656	0.00223				
60 % Glycerin / 40 % Water					1,147	3.176	0.00819				
Potassium Acetate / Water					1,196	3.300	0.00270				
Fluorinert 72		1,722.12	1.025	0.00117				1,669.92	1.056	0.00092	
Hydrofluoroether HFE-7100		1,522.76	1.147	0.00088				1,477.38	1.187	0.00071	
Ammonia (liquid)	Toxic	628.20	4.679	0.000232				600.46	4.854	0.00021	
D Limonene	Flammable				847.5	2.05	0.00091				

Table 5.7.4 and Table 5.7.5 provide appropriate thermodynamic values to compute energy balances of phase-change materials for representative materials. Of the materials available, both here and more generally, water requires the greatest heat input for the least mass and is the "best" phase-change material available, although the temperatures at which it transitions from one phase to the next sometimes prohibits its use. While the temperature at which a liquid boils varies directly with pressure, melting point temperatures are effectively invariant with pressure for applications likely to see use in spaceflight.

Table 5.7.4 Thermodynamic Properties of Common Thermal Control Phase-Change Materials for Liquid-Vapor Transitions

Material	Formula	Liquid Density [kg/m³]	Saturation Pressure [kPa]	Saturation Temper-ature [K]	Heat of Vapori-zation [kJ/kg]
Ammonia	NH_3	702.2 (1)	40.7 (1)	223.2 (1)	1,425.8 (1)
		690.1 (1)	71.6 (1)	233.2 (1)	1,392.5 (1)
		677.5 (1)	119.5 (1)	243.2 (1)	1,361.1 (1)
Water	H_2O	1,000 (1)	0.61 (1)	273.2 (1)	2,500.0 (1)
		1,000 (1)	1.23 (1)	283.2 (1)	2,478.4 (1)
		998 (1)	2.34 (1)	293.2 (1)	2,455.0 (1)

Reference

(1) Howell and Buckius (1987)

Table 5.7.5 Thermodynamic Properties of Common Thermal Control Phase-Change Materials for Solid-Liquid Transitions

Material	Formula	Solid Density [kg/m³]	Liquid Density at 20°C [kg/m³]	Melting Temper-ature [K]	Heat of Fusion [kJ/kg]
Water	H_2O	920 (1)	998 (2)	273.2 (3)	333.5 (3)
Waxes (Paraffin)					
n-Dodecane	$C_{12}H_{26}$		748.7 (3)	263.6 (4)	210.5 (4)
n-Tetradecane	$C_{14}H_{30}$		762.8 (3)	279.1 (4)	229.9 (4)
n-Hexadecane	$C_{16}H_{34}$		773.3 (3)	291.4 (4)	228.9 (4)
n-Octadecane [203]	$C_{18}H_{38}$		776.8 (3)	301.4 (4)	243.5 (4)

References

(1) Incropera and DeWitt (1985)
(2) Howell and Buckius (1987)
(3) Weast and Astle (1979)
(4) Humphries and Griggs (1977)

[203] The liquid density for n-octadecane is evaluated at 28 °C.

6 REFERENCES

Allen, C. C., and Zubrin, R. (1999) "In-situ Resources," Chapter 15, *Human Spaceflight: Mission Analysis and Design*, Larson, W. J., and Pranke, L., Editors, McGraw-Hill Space Technology Series, New York, New York.

ALS RD (1998) "Advanced Life Support Program: Requirements Definition and Design Consideration," JSC-38571 (CTSD-ADV-245, Rev. A), Lange, K. E., and Lin, C. H., Editors, National Aeronautics and Space Administration, Lyndon B. Johnson Space Center, Houston, Texas.

ALS RD (2003) "Advanced Life Support Requirements Document," JSC-38571 (CTSD-ADV-245), Revision C, Duffield, B. E., Editor, National Aeronautics and Space Administration, Lyndon B. Johnson Space Center, Houston, Texas, February, 2003.

ALS Systems Workshop (1998) National Aeronautics and Space Administration, Lyndon B. Johnson Space Center, Houston, Texas. Presentation to the Advanced Life Support Systems Workshop, March 1998.

Atwell, W., and Badhwar, G. (2000) "TransHab Shield Model and Crew Radiation Exposures," 33rd Scientific Assembly of the Committee on Space Research (COSPAR), Warsaw, Poland, 16-23 July 2000.

AZ Technology (1993) "Laboratory Portable Spectroreflectometer LPSR-200 Briefing," AZ Technology, Huntsville, Alabama. See also: http://www.aztechnology.com/. Presentation to National Aeronautics and Space Administration, Lyndon B. Johnson Space Center, 18 November 1993.

Ball, V. E., Butault, J.-P., and Nehring, R. (2001) "U. S. Agriculture, 1960-96: A Multilateral Comparison of Total Factor Productivity," Technical Bulletin Number 1895, United States Department of Agriculture, Economic Research Service, Resource Economics Division, Washington, D. C.

Barta, D. J., Castillo, J. M., and Fortson, R. E. (1999) "The Biomass Production System for the Bioregenerative Planetary Life Support Systems Test Complex: Preliminary Designs and Considerations," SAE paper 1999-01-2188, 29th International Conference on Environmental Systems, Society of Automotive Engineers, Warrendale, Pennsylvania.

Barta, D. J., and Ewert, M. K. (2002) National Aeronautics and Space Administration, Lyndon B. Johnson Space Center, Houston, Texas. Personal communication based on data from the Variable Pressure Growth Chamber at Lyndon B. Johnson Space Center, 30 April 2002.

BDB (1973) *Bioastronautics Data Book*, 2nd Edition, NASA SP 3006, Parker, J. S., Jr., and West, V. R., Editors, National Aeronautics and Space Administration, Washington, D. C.

Behrend, A. F., Jr., and Henninger, D. L. (1998) "Baseline Crops for Advanced Life Support Program," JSC Memo EC3-98-066, National Aeronautics and Space Administration, Lyndon B. Johnson Space Center, Houston, Texas.

http://advlifesupport.jsc.nasa.gov/baselinecrops.html

Berte, M. and Capell, B. (1998), Tables 2-4, "Balance of Plant Options for the Heat Pipe Bimodal System", American Institute of Physics, CP420, Space Technology and Applications International Forum (STAIF), 1998

Boeing (1994) "System Specification for the International Space Station Alpha," SSP-41000, Contract Number NAS15-10000, CDRL Sequence Number MG02, Boeing Defense and Space Group, Space Station Program Office, Houston, Texas, 9 February 1994.

Boeing (2002) "Orbiter Vehicle End Item Specification for the Space Shuttle System, Part 1, Performance and Design Requirements," MJ070-0001-1E, The Boeing Company, Houston, Texas, 07 November 2002.

Bourland, C. T. (1998) National Aeronautics and Space Administration, Lyndon B. Johnson Space Center, Houston, Texas. Personal communication, 9 December 1998.

Bourland, C. T. (1999) National Aeronautics and Space Administration, Lyndon B. Johnson Space Center, Houston, Texas. Personal communication, 25 May 1999.

Branch, G. (1998) "International Space Station Clothing Subsystem," National Aeronautics and Space Administration, Lyndon B. Johnson Space Center, Houston, Texas. Presentation to the Advanced Life Support Systems Analysis Workshop, 27 March 1998.

Bugbee, B. (1998) Plants, Soils, and Biometeorology Department, Utah State University, Logan, Utah. Personal communication.

Carrasquillo, R. L., Reuter, J. L., and Philistine, C. L. (1997) "Summary of Resources for the International Space Station Environmental Control and Life Support System," SAE Paper 972332, 27th International Conference on Environmental Systems, Lake Tahoe, Nevada, Society of Automotive Engineers, Warrendale, Pennsylvania.

Carter, D. L. (1998) "Waste Water Characterization for the ISS Water Processor," SAE Paper 981616, 28th International Conference on Environmental Systems, Society of Automotive Engineers, Warrendale, Pennsylvania.

Castillo, J. (2000) Lockheed Martin Space Operations, Houston, Texas. Personnel communication, 29 March 2000.

Cataldo, R. L. (1998) "Comparison of Solar Photovoltaic and Nuclear Power Systems for Human Missions to Mars," Mars Exploration Forum, Lunar and Planetary Institute, Houston, Texas, 4-5 May 1998.

Cataldo, R. L. (2006) National Aeronautics and Space Administration, Glenn Research Center, Cleveland, Ohio. Personal communication.

Cavazzoni, J. (2001) "Crop Specific Parameters for Use in Modified Energy Cascade Models," Bioresource Engineering, Department of Plant Science, Rutgers University, New Brunswick, New Jersey, January 2001.

Chaput, K. (2003) "On-orbit Consumables Matrix," National Aeronautics and Space Administration, Lyndon B. Johnson Space Center, International Space Station Program, Houston, Texas, 05 February 2003.

http://iss-www.jsc.nasa.gov/ss/issapt/consumables/ConsumablesTeam.html

Charmin (2002) "Bath Tissue Trivia," http://www.charmin.com/en_us/pages/facts_trivia.shtml, Charmin®, The Proctor and Gamble Company, Cincinnati, Ohio.

Clark, K. (2003) National Aeronautics and Space Administration, Ames Research Center, Moffett Field, California. Personal communication based on Huggies® Wipe gravimetric analysis, 29 May 2003.

Clawson, J. M. (2006) "Feasibility of a Mars Surface Inflatable Greenhouse: Availability of Photosynthetic Irradiance and the Durability of Transparent Polymer Films," Dissertation, University of Colorado, Bolder, Colorado, United States of America.

Conger, B. C., and Clark, C. S. (1997) "Thermal Analysis Basics and Design Guidelines," Lockheed Martin Space Operations, Houston, Texas. Internal teaching lecture notes from 12 January 1997.

Database (2002) Lockheed Martin Space Operations for National Aeronautics and Space Administration, Lyndon B. Johnson Space Center, Houston, Texas. Internal interim Advanced Life Support Database for Fiscal Year 2002.

Davis, J. M., Cataldo, R. L., Soeder, J. F., Manzo, M. A., and Hakimzadeh, R. (2005) "An Overview of Power Capability Requirements for Exploration Missions," NASA/TM-2005-213600, National Aeronautics and Space Administration, Glenn Research Center, Cleveland, Ohio.

de Vera, T. L., Jr. (1998a) "Environmental Control and Life Support System (ECLS) Section of the Space Station Operations Data Book (SSODB) United States Laboratory Module," Draft Engineering Release, Revision B, The Boeing Company, Houston, Texas, June 1998.

de Vera, T. L., Jr. (1998b) "Environmental Control and Life Support System (ECLS) Section of the Space Station Operations Data Book (SSODB) Joint Airlock," Draft Engineering Release, The Boeing Company, Houston, Texas, August 1998.

de Vera, T. L., Jr. (1999) "Environmental Control and Life Support System (ECLS) Section of the Space Station Operations Data Book (SSODB) Node 1," Flight Release, Revision D, The Boeing Company, Houston, Texas, March 1999.

Derbés, B. (1999) "Case Studies in Inflatable Rigidizable Structural Concepts for Space Power," AIAA Paper AIAA-99-1089, 37th AIAA Aerospace Sciences Meeting and Exhibit, Reno, Nevada, American Institute of Aeronautics and Astronautics, Reston, Virginia.

Diem, K; and Lentner, C., Editors (1970) *Documenta Geigy: Scientific Tables*, 7th Edition, Ciba-Geigy Limited, Basle, Switzerland, page 657.

Dornier, Equipment specification from Dornier System for Modular Spacelab.

Drysdale, A. E. (1998) "KSC Systems Analysis," The Boeing Company, John F. Kennedy Space Center, Florida. Presentation to the Advanced Life Support Systems Analysis Workshop, 26 March 1998.

Drysdale, A. E. (1999a) The Boeing Company, Kennedy Space Center, Florida. Personal communication, 1999.

Drysdale, A. E. (1999b) "Biomass Production System – Optimized from State-of-Art," The Boeing Company, John F. Kennedy Space Center, Florida. Draft presentation for Systems Modeling and Analysis Project management, 7 June 1999.

Drysdale, A. E. (2001) The Boeing Company, Kennedy Space Center, Florida. Personal communication, 7 May 2001. This information is a compilation of multiple sources as provided by Drysdale.

Drysdale, A. E., Beavers, D., and Posada, V. (1997) "KSC Life Sciences Project Annual Report for January to December, 1997," The Boeing Company, John F. Kennedy Space Center, Florida, June 1998.

Duffield, B. E. (2001) "Review of the Radiation Environment and Shielding Options for Deep Space Missions," MSAD-01-0567, Lockheed Martin Space Operations, Houston, Texas.

Eagle Engineering (1988) "Conceptual Design of a Lunar Base Solar Power Plant - Lunar Base Systems Study Task 3.3," Table 9, NASA-CR-172086, Eagle Engineering, Houston, Texas, August 1988.

Eagle-Picher (2003) "Nickel Hydrogen Battery Technical Data Sheet for RNH 81 5 Cells," Eagle-Picher Technologies, LLC, Space Business Unit, Joplin, Missouri.

Eckart, P. (1996) *Spaceflight Life Support and Biospherics*, Space Technology Library, Microcosm Press, Torrance, California.

EDCC (1998) "Maximum Absorption Garment III, Extravehicular Mobility Unit Equipment," Drawing Number SED 13101720, Revision B, National Aeronautics and Space Administration, Lyndon B. Johnson Space Center, Engineering Drawing Control Center, Houston, Texas, 22 January 1998.

EDIS (2001) Extension Digital Information Source, Institute of Food and Agricultural Sciences, University of Florida, Gainesville, Florida.

http://edis.ifas.ufl.edu/

El-Genk, M. S., and Tournier, J. (2003) "Conceptual Design of a 100 kW Reactor for a Space Nuclear Reactor Power System with high Powered AMTEC," American Institute of Physics, CP654, Space Technology and Applications International Forum (STAIF), 2003.

Elliot, J. O., Lipinski, R. J., and Poston, D. I. (2003), "Design Concept for a Nuclear Reactor-Powered Mars Rover," American Institute of Physics, CP654, Space Technology and Applications International Forum (STAIF), 2003.

ESAS (2005) "NASA's Exploration Systems Architecture Study," NASA/TM-2005-214062, National Aeronautics and Space Administration, Washington, D.C., November 2005.

ESM GD (2003) "Advanced Life Support Equivalent System Mass Guidelines Document," NASA TM-2003-212278, Levri, J. A., Drysdale, A. E., Ewert, M. K., Fisher, J. W., Hanford, A. J., Hogan, J. A., Jones, H. W., Joshi, J. A., and Vaccari, D. A., Authors, National Aeronautics and Space Administration, Ames Research Center, Moffett Field, California.

http://advlifesupport.jsc.nasa.gov/docs.html

Ewert, M. K. (1998) National Aeronautics and Space Administration, Lyndon B. Johnson Space Center, Houston, Texas. Personal communication based on data from internal Biomass Production Chamber Lighting System Trade Study, October 1998.

Ewert, M. K. (2001) National Aeronautics and Space Administration, Lyndon B. Johnson Space Center, Houston, Texas. Personal communication, 16 August 2001.

Ewert, M. K. (2002a) National Aeronautics and Space Administration, Lyndon B. Johnson Space Center, Houston, Texas. Personal communication, 17 April 2002.

Ewert, M. K. (2002b) "A Simplified Method of Characterizing Refrigerator/Freezer Performance," National Aeronautics and Space Administration, Lyndon B. Johnson Space Center, Crew and Thermal Systems Division, Houston, Texas. Internal Crew and Thermal Systems Division white paper dated 08 April 2002.

Ewert, M. K., Curry, D. M., Lin, C. H., and Brown, R. G. (1999) "Thermal Control," Chapter 16, *Human Spaceflight: Mission Analysis and Design*, Larson, W. J., and Pranke, L., Editors, McGraw-Hill Space Technology Series, New York, New York.

Ewert, M. K., and Drake, B. G. (2000) National Aeronautics and Space Administration, Lyndon B. Johnson Space Center, Houston, Texas. Personal communication, 29 June 2000, describing proposed crew water usage allocations during short-term phases of exploration missions for use in studies by the Exploration Office.

Ewert, M. K., Keller, J. R., and Hughes, B. (1996) "Conceptual Design of a Solar Powered Heat Pump for Lunar Base Thermal Control System," SAE Paper 961535, Society of Automotive Engineers, Warrendale, Pennsylvania.

Flynn, M. (2003) National Aeronautics and Space Administration, Ames Research Center, Moffett Field, California. Personal communication, 21 May 2003, confirming that urine pretreatment is not required for vapor phase catalytic ammonia removal.

French, S. J., and Perchonok, M. H. (2006) "Evaluation of a 10-Day Menu Using a Bulk Commodity Supply Scenario," JSC 63366, Revision: Basic, National Aeronautics and Space Administration, Lyndon B. Johnson Space Center, Habitability and Environmental Factors Division, Houston, Texas, February, 2006.

Frisbee, R. H., and Hoffman, N. J. (1993) "SP-100 Nuclear Electric Propulsion for Mars Cargo Missions," AIAA Paper AIAA-93-2092, 29th AIAA/SAE/ASME/ASEE Joint Propulsion Conference and Exhibit, Monterey, California, June 1993, American Institute of Aeronautics and Astronautics, Washington, D. C.

Frisbee, R. H., and Hoffman, N. J. (1996) "Electric Propulsion Options for Mars Cargo Missions," AIAA Paper AIAA-96-3173, 32nd AIAA/ASME/SAE/ASEE Joint Propulsion Conference and Exhibit, Lake Buena Vista, Florida, July 1996, American Institute of Aeronautics and Astronautics, Reston, Virginia.

Garcia, R. (1989) "Space Transportation System 29 (STS-29) Trash Evaluation Final Report," JSC-SP-89-1, National Aeronautics and Space Administration, Lyndon B. Johnson Space Center, Houston, Texas.

Geffre, J. R. (2003) National Aeronautics and Space Administration, Lyndon B. Johnson Space Center, Houston, Texas. Personal communication, 15 July 2003.

Geffre, J. R. (2004) National Aeronautics and Space Administration, Lyndon B. Johnson Space Center, Houston, Texas. Personal communication, 11 February 2004.

Green, J., Lemmons, N., and Halligan, J. (2000) "ISS Integrated Traffic Model," ISS Program Document TDS D8.1.1-04, International Space Station Program, The Boeing Company, Houston, Texas. Dated 02 June 2000.

Grounds, P. (1990) "Space Transportation System 35 (STS-35) Trash Evaluation Final Report," JSC-SP-90-2, National Aeronautics and Space Administration, Lyndon B. Johnson Space Center, Houston, Texas.

Hall, P., Vodovotz, Y., and Peterson, L. (2000) National Aeronautics and Space Administration, Lyndon B. Johnson Space Center, Houston, Texas. Personal communication, 22 February 2000.

Hall, P., and Vodovotz, Y. (1999) National Aeronautics and Space Administration, Lyndon B. Johnson Space Center, Houston, Texas. Personal communication, 10 May 1999.

Hallberg, L. and Nilsson, L. (1964) "Constancy of individual menstrual blood loss," *Acta Obst. Gynec. Scandinav.*, **43**, pp. 352-360.

Ham. Stand. (1970) "Trade-off Study and Conceptual Designs of Regenerative Advanced Integrated Life Support Systems (AILSS), February 1968 – January 1970," NASA-CR-1458, Hamilton Standard, Windsor Locks, Connecticut.

Hanford, A. J. (1997) "Advanced Regenerative Life Support System Study," JSC-38672 (CTSD-ADV-287), National Aeronautics and Space Administration, Lyndon B. Johnson Space Center, Houston, Texas. See also: Hanford, A. J. (1997) "Advanced Regenerative Life Support System Study Update," LMSMSS-32447, Lockheed Martin Space Mission Systems and Services, Houston, Texas.

Hanford, A. J. (1998) "Power-Mass Penalties and Radiator Sink Temperatures on Luna and Mars for Advanced Life Support System Parametric Studies," LMSMSS-32749, Lockheed Martin Space Mission Systems and Services, Houston, Texas.

Hanford, A. J. (2000) "A List of Life Support Subsystems for the Advanced Life Support Project," MSAD-00-0138, Lockheed Martin Space Operations, Houston, Texas.

Hanford, A. J., and Ewert, M. K. (1996) "Advanced Active Thermal Control Systems Architecture Study Report," NASA-TM-104822, National Aeronautics and Space Administration, Lyndon B. Johnson Space Center, Houston, Texas.

Harty, R. B., and Durand, R. E. (1993) "Lunar Electric Power Systems Utilizing the SP-100 Reactor and Dynamic Conversion Systems," NASA CR-191023, Rockwell International Corporation, Rocketdyne Division, Canoga Park, California, March 1993.

Hawk, P. B. (1965) *Hawk's Physiological Chemistry*, Oser, B. L., Editor, McGraw-Hill, New York, New York, 1472 pp.

Hoang, D., Ludwigs, S., Schmitz, P., and Wright, J. (1988) "Mars Sample Return Power Supply," NASA-CR-184708, Texas A&M University, Nuclear Engineering Department, College Station, Texas.

Hoffman, S. J., and Kaplan, D. L. (1997) "Human Exploration of Mars: The Reference Mission of the NASA Mars Exploration Study Team," NASA-SP-6107, National Aeronautics and Space Administration, Lyndon B. Johnson Space Center, Houston, Texas.

http://exploration.jsc.nasa.gov/marsref/contents.html

Hopper, D. A., Stutte, G. W., McCormack, A., Barta, D. J., Heins, R. D., Erwin, J. E., and Tibbitts, T. W. (1997) "Crop growth requirements (Appendix)," in Langhans, R. W., and Tibbitts, T. W., Editors, *Plant Growth Chamber Handbook*, Iowa Agriculture and Home Economics Experiment Station Special Report No. 99, Iowa Sate University, Ames, Iowa.

Howell, J. R., and Buckius, R. O. (1987) *Fundamentals of Engineering Thermodynamics, SI Version*, McGraw-Hill Book Company, New York, New York.

Hughes, B. (1995) "Lunar Base Power System for Solar Heat Pumps," LMES-31919, Lockheed Martin Engineering and Sciences, Houston, Texas.

Humphries, W. R., and Griggs, E. I. (1977) "A Design Handbook for Phase Change Thermal Control and Energy Storage Devices," NASA Technical Paper 1074, National Aeronautics and Space Administration, George C. Marshall Space Flight Center, Huntsville, Alabama, November, 1977.

Hunter, J. (1999) Department of Agricultural and Biological Engineering, Cornell University, Ithaca, New York. Personal communication, 24 May 1999.

Hunter, J. and Drysdale, A. E. (1996) "Concepts for Food Processing for Lunar and Planetary Stations," SAE paper 961415, 26th International Conference on Environmental Systems, Society of Automotive Engineers, Warrendale, Pennsylvania.

Hunter, J. and Drysdale, A. E. (2002) Department of Agricultural and Biological Engineering, Cornell University, Ithaca, New York, and The Boeing Company, Kennedy Space Center, Florida. Personal communication, 03 October 2002.

Incropera, F. P., and DeWitt, D. P. (1985) *Fundamentals of Heat and Mass Transfer*, 2nd Edition, John Wiley and Sons, Inc., New York, New York.

ISS (1999) "On-Orbit Assembly Modeling and Mass Properties Data Book" JSC-265573, Revision J, Volume 1, National Aeronautics and Space Administration, Lyndon B. Johnson Space Center, Houston, Texas, August 1999.

Jan, D. (1998) "Monitoring and Control Mass Estimate Issues," National Aeronautics and Space Administration, Headquarters, Washington, D. C. Presentation to the Advanced Life Support Systems Analysis Workshop, 27 March 1998.

JCPC (1999) "Joint Crew Provisioning Catalog," SSP 50477, Rogers, J. A., Editor, National Aeronautics and Space Administration, Lyndon B. Johnson Space Center, International Space Station Program, Houston, Texas. This Baseline is dated September 1999.

Jeng, F., and Ewert, M. K. (2002) "Trade Study on Laundry System for Advanced and ISS Missions," Revision 4, National Aeronautics and Space Administration, Lyndon B. Johnson Space Center, Houston, Texas. Presentation package for the National Aeronautics and Space Administration, 18 January 2002.

http://advlife.support.jsc.nasa.gov

Jones, B. (2000) "Trash," http://iss-www.jsc.nasa.gov/ss/issapt/mio/trash/trash_cat.html, National Aeronautics and Space Administration, Lyndon B. Johnson Space Center, Houston, Texas, 05 October 2000.

Jones, H., and Cavazzoni, J. (2000) "Crop Models for Advanced Life Support Analysis," SAE Paper 2000-01-2261, 30th International Conference on Environmental Systems, Toulouse, France, Society of Automotive Engineers, Warrendale, Pennsylvania.

Juhasz, J. J., and Bloomfield, H. S. (1994) "Development of Lightweight Radiators for Lunar Based Power Systems," NASA/TM-1994-106604, National Aeronautics and Space Administration, Lewis Research Center, Cleveland, Ohio.

K&K (1998) "Luna's (Earth's Moon) Thermal Environment," K & K Associates, Westminster, Colorado. Note: Material extracted from "Thermal Environments," JPL D-8160.

http://www.csn.net/~takinfo/planets/luna.htm

Kerslake, T. W. (2005) "Electric Power System Technology Options for Lunar Surface Missions," NASA/TM-2005-213629, National Aeronautics and Space Administration, Glenn Research Center, Cleveland, Ohio, April 2005.

Kilbourn, M. (1998) "ISS-TransHab Mass," National Aeronautics and Space Administration, Lyndon B. Johnson Space Center, Advanced Development Office, Houston, Texas. Internal NASA spreadsheet summarizing TransHab masses dated 09 October 1998.

Kloeris, V., Vodovotz, Y., Bye, L., Stiller, C. Q., and Lane, E. (1998) "Design and Implementation of a Vegetarian Food System for a Closed Chamber Test," *Life Support & Biosphere Science, International Journal of Earth/Space*, **5**, pp. 231-242.

Lafuse, S. (2001) National Aeronautics and Space Administration, Lyndon B. Johnson Space Center, Houston, Texas. Personal communication detailing nitrogen tankage properties from several vendors, August 2001.

Lahey, Jr., R. T., and Dhir, V. (2004) "Research in Support of the Use of Rankine Cycle Energy Conversion Systems for Space Power and Propulsion," NASA/CR-2004-213142, National Aeronautics and Space Administration, Glenn Research Center, Cleveland, Ohio, July 2004.

Landis, G. A., and Appelbaum, J. (1991) *Photovoltaic Power Options for Mars Space Power*, Vol. 10, No. 2, pp 225-237.

Landis, G. A., McKissock, B. I., and Bailey, S. G. (1999) "Designing Power Systems," Chapter 20, *Human Spaceflight: Mission Analysis and Design*, Larson, W. J., and Pranke, L., Editors, McGraw-Hill Space Technology Series, New York, New York.

Lane, H. W., Bourland, C. T., Pierson, D., Grigorov, E., Agureev, A., and Dobrovolsky, V. (1996) "Nutritional Requirements for International Space Station Missions up to 360 days," JSC-28038, National Aeronautics and Space Administration, Lyndon B. Johnson Space Center, Houston, Texas.

Lange, K. E. (1998) Lockheed Martin Space Mission Systems and Services, Houston, Texas. From a spreadsheet prepared by K. E. Lange compiling material presented at the Advanced Life Support Systems Analysis Workshop in Houston, Texas, March 1998. See also: Hanford, A. J. (1998) "Advanced Life Support System (ALSS) Study Water Recovery System," Lockheed Martin Space Mission Systems and Services, Houston, Texas. Presentation to the Advanced Life Support Systems Analysis Workshop, 27 March 1998.

Lange, K. E. (1999) Lockheed Martin Space Operations, Houston, Texas. Personal communication, 5 September 1999.

Langston, L. (2005) "Generic Groundrules, Requirements, and Constraints Part 1: Strategic and Tactical Planning," SPP 50261-01, Revision A, Incorporates DCN 017, National Aeronautics and Space Administration, International Space Station Program, Lyndon B. Johnson Space Center, Houston, Texas. Entry date for DCN 017 is September 2005. Original document released in December 1998.

Larminie, J., and Dicks, A. (2003) *Fuel Cell Systems Explained*, 2nd Edition, John Wiley and Sons, Inc., New York, New York.

Leach, C. S. (1983) "Medical Results from STS 1-4: Analysis of Body Fluids," *Aviation, Space, and Environmental Medicine*, **54**, S50-S54.

Lee, W.-C., and Duffield, B. E. (2006) "Power Mass Penalty Data – 2005," ESCG-4470-05-TEAN-DOC-0126A, Revision A, Engineering and Science Contract Group, Houston, Texas, August 2006. Original document released in October 2005.

Levri, J. A. (2002) Summary Food Data Spreadsheet, National Aeronautics and Space Administration, Ames Research Center, Moffett Field, California. Draft as of 25 February 2002.

Levri, J., Ewert, M., Kloeris, V., Perchonok, M., Peterson, L., Swango, B., Toerne, M., and Vittadini, E. (2001) "Food System Trade Study for an Early Mars Mission," SAE Paper 2001-01-2364, 31st International Conference on Environmental Systems, Orlando, Florida, Society of Automotive Engineers, Warrendale, Pennsylvania. The data from this paper are summarized in a spreadsheet at:

http://joni.arc.nasa.gov/Private/food/index.shtml

Levri, J. A., Vaccari, D. A., and Drysdale, A. E. (2000) "Theory and Application of the Equivalent System Mass Metric," SAE Paper 2000-01-2395, 30th International Conference on Environmental Systems, Toulouse, France, Society of Automotive Engineers, Warrendale, Pennsylvania.

Lin, C. H. (1997) "Mars Transit Habitat ECLSS," National Aeronautics and Space Administration, Lyndon B. Johnson Space Center, Houston, Texas. Internal NASA presentation package from Crew and Thermal Systems Division dated April 1997. See also: Lin, C. H. (1997) "Mars Transit Habitat ECLSS, Initial Baseline and Trade Studies," National Aeronautics and Space Administration, Lyndon B. Johnson Space Center, Houston, Texas. Internal NASA presentation package from Crew and Thermal Systems Division dated 9 December 1997.

Lin, C. H. (1998) "Node 3 Peer Review," National Aeronautics and Space Administration, Lyndon B. Johnson Space Center, Houston, Texas. Internal NASA presentation package from Crew and Thermal Systems Division dated January 1998.

Lipinski, R. J., *et al.* (2002) "Small Fission Power System for NEP," American Institute of Physics, CP608, Space Technology and Applications International Forum (STAIF), 2002.

Littman, F. D. (1994) "Mars Power System Concept Definition Study," NASA CR-195420, Rockwell International Corporation, Rocketdyne Division, Canoga Park, California, December 1994.

LRM (2006) "A Lunar Reference Mission for Advanced Life Support," ESCG-4470-06-TEAN-DOC-0041, Hanford, A. J., Author, Engineering and Science Contract Group, Jacobs Sverdrup, Houston, Texas.

LSDB (1962) *NASA Life Sciences Data Book*, 1st Edition, Webb Associates, Yellow Springs, Ohio.

Lunsford, T., and Grounds, P. (1993) "Single Phase Laundry System Development," SAE paper 932092, Society of Automotive Engineers, Warrendale, Pennsylvania.

MADS (2001) "Modeling and Analysis Data Set (MADS)," National Aeronautics and Space Administration, Lyndon B. Johnson Space Center, Manifest Working Group, Houston, Texas October 2001.

Mason L. S. (1999a) "Technology Projections for Solar Dynamic Power," NASA/TM-1999-208851, National Aeronautics and Space Administration, Lewis Research Center, Cleveland, Ohio, January 1999.

Mason L. S. (1999b) "A Solar Dynamic Power Option for Space Solar Power," NASA/TM-1999-209380, National Aeronautics and Space Administration, Glenn Research Center, Cleveland, Ohio, July 1999. Also: SAE Paper 99-01-2601, 34th Intersociety Energy Conversion Engineering Conference, Vancouver, British Columbia, Canada, Society of Automotive Engineers, Warrendale, Pennsylvania.

Mason, L. S. (2006) "A Comparison of Fission Power System Options for Lunar and Mars Surface Missions," NASA/TM-2006-214120, National Aeronautics and Space Administration, Glenn Research Center, Cleveland, Ohio, February 2006.

Mason, L. S., Rodriguez, C. D., McKissock, B. I., Hanlon, J. C., and Mansfield, B. C. (1992) "SP-100 Reactor with Brayton Conversion for Lunar Surface Applications," NASA TM 105637, National Aeronautics and Space Administration, Lewis Research Center, Cleveland, Ohio.

Maxwell, S. (2000a) "Waste Stream Analysis for STS-99," The Boeing Company, Boeing Space Coast Operations, Kennedy Space Center, Florida. Internal Boeing Document.

Maxwell, S. (2000b) "Waste Stream Analysis for STS-101," The Boeing Company, Boeing Space Coast Operations, Kennedy Space Center, Florida. Internal Boeing Document.

Maxwell, S. (2001a) The Boeing Company, Boeing Space Coast Operations, Kennedy Space Center, Florida. Personal communication of unpublished results calculated from International Space Station Phase II data using the Johnson Space Center Crew Provisions.

Maxwell, S. (2001b) The Boeing Company, Boeing Space Coast Operations, Kennedy Space Center, Florida. Personal communication of unpublished results determined by analyzing the International Space Station Multi-Purpose Logistics Module and Progress Vehicle Manifests for Increments 0 through 5.

McBarron, J. W., Whitsett, C. E., Severin, G. I., and Abramov, I. P. (1993) "Individual Systems for Crewmember Life Support and Extravehicular Activity," *Space Biology and Medicine, Volume II, Life Support and Habitability*, Sulzman, F. M., and Genin, A. M., Editors, American Institute of Aeronautics and Astronautics, Washington, D. C.

McGlothlin, E. P. (2000) "ISS Hygiene Options for the Hygiene Compartment Design Effort," LMSEAT 33276, Lockheed Martin Space Operations, Houston, Texas, March 2000.

Mehos, M., Lewandowski, A., Symko-Davies, M., and Kirtz, S. (2001) "Concentrating Photovoltaics: Collaborative Opportunities within DOE's CSP and PV Programs," NREL/CP-520-31143, NCPV Program Review Meeting, October, 2001, Lakewood, Colorado, National Renewable Energy Laboratory, Golden, Colorado.

Metric (2005) "Advanced Life Support Research and Technology Development Metric – Fiscal Year 2005," NASA/CR-2006-213694, Hanford, A. J., Author, National Aeronautics and Space Administration, Lyndon B. Johnson Space Center, Houston, Texas, February 2006.

Monje, O. (1998) "Predicting Transpiration Rates of Hydroponically-Grown Plant Communities in Controlled Environments," Ph.D. Dissertation, Utah State University, Logan, Utah, United States of America.

Monje, O., and Bugbee, B. (1998) "Adaptation to High CO_2 Concentration in an Optimal Environment: Radiation Capture, Canopy Quantum Yield and Carbon Use Efficiency," *Plant, Cell and Environment*, **21**, pp. 315-324.

MSIS (1995) "Man-Systems Integration Standards," NASA-STD-3000, Volume I, Revision B, National Aeronautics and Space Administration, Lyndon B. Johnson Space Center, Houston, Texas, July 1995.

http://msis.jsc.nasa.gov/

Muller, H. G. and Tobin, G. (1980) *Nutrition and Food Processing*, AVI Publishing Company, Westport, Connecticut.

NASA (1969) "Apollo 11 Lunar Landing Mission Press Kit," Release Number 69-83K, National Aeronautics and Space Administration, Washington, D. C., 06 July 1969.

http://www-lib.ksc.nasa.gov/lib/presskits.html

NASA (1989) "Lunar/Mars Exploration Initiative; Conceptual Design of Power Systems," JSC-24101, National Aeronautics and Space Administration, Lyndon B. Johnson Space Center, Houston, Texas.

NASA (1990) "Environmental Control and Life Support System Architectural Control Document," SSP-30262, Preliminary Design Review Draft, National Aeronautics and Space Administration, George C. Marshall Space Flight Center, Huntsville, Alabama, April 1990.

NASA (1991) "Environmental Control and Life Support System Architectural Control Document," SSP-30262, Revision D, National Aeronautics and Space Administration, Space Station Freedom Program Office, Reston, Virginia, July 1991.

NASA (1996) "Food for Space Flight," NASA Facts, NP-1996-07-007JSC, National Aeronautics and Space Administration, Lyndon B. Johnson Space Center, Houston, Texas, July 1996.

NASA (1998) "International Space Station Familiarization," TD9702A, National Aeronautics and Space Administration, Lyndon B. Johnson Space Center, Mission Operations Directorate, Space Flight Training Division, Houston, Texas, 31 July 1998.

http://spaceflight.nasa.gov

NASA (1999) "TransHab: An Inflatable Habitation Module for ISS and other Space Applications," National Aeronautics and Space Administration, Lyndon B. Johnson Space Center, Advanced Development Office, Houston, Texas. Internal presentation dated April 1999.

NASA (2001a) "JSC Advanced Design Team; Lunar Transfer Vehicle Management Review," National Aeronautics and Space Administration, Lyndon B. Johnson Space Center, Advanced Development Office, Houston, Texas. Internal presentation to management dated 08 August 2001.

NASA (2001b) "Manifest for ISS Assembly Flight 5A," NASA CR 5060, National Aeronautics and Space Administration, Lyndon B. Johnson Space Center, Advanced Development Office, Houston, Texas, 28 February 2001.

NASA (2001c) "Manifest for ISS Assembly Flight 7A," NASA CR 5872, National Aeronautics and Space Administration, Lyndon B. Johnson Space Center, Advanced Development Office, Houston, Texas, 22 August 2001.

NASA (2002) "Fuel Cell Power Plants," Internet Article, National Aeronautics and Space Administration, Human Spaceflight, Washington, D. C., last updated April 2002.

http://spaceflight.nasa.gov/shuttle/reference/shutref/orbiter/eps/pwrplants.html

NASA (2004) "Joint ECLSS Functional Strategy (JEFS) Document," SSP-50623, National Aeronautics and Space Administration, Lyndon B. Johnson Space Center, Houston, Texas, January 2004.

NRC (1989) "Recommended Dietary Allowances," 10th Edition, National Research Council, National Academy Press, Washington, D. C.

Niehuss, K. O. (2001) "Environmental Control and Life Support System (ECLSS) Mass Properties Report #17," National Aeronautics and Space Administration, George C. Marshall Space Flight Center, Huntsville, Alabama, October 2001.

NPD 8010.2 D (2004) "Use of the SI (Metric) System of Measurement in NASA Programs," NPD 8010.2 D, National Aeronautics and Space Administration, Headquarters, Office of the Chief Engineer, Washington, D. C., 14 May 2004.

http://nodis3.gsfc.nasa.gov/displayDir.cfm?Internal_ID=N_PD_8010_002D_&page_name=main

Orcun, S., and Wheeler, R. M. (2003) NASA Specialized Center of Research and Training in Advanced Life Support, Systems Group, Purdue University, West Lafayette, Indiana, and National Aeronautics and Space Administration, John F. Kennedy Space Center, Florida. Personal communications, 24 June 2003 and 04 December 2003.

Parker, D., and Gallagher, S. K. (1992) "Distribution of human waste samples in relation to sizing waste processing in space," The Second Conference on Lunar Bases and Space Activities of the 21st Century, NASA Conference Publication 3166, Volume 2, Mendell, W. W. Editor, National Aeronautics and Space Administration, Washington, D. C., pp. 563-568.

Patel, M. R. (2005) "Photovoltaic-Battery System," Chapter 4, *Spacecraft Power Systems*, CRC Press, Inc., Boca Raton, Florida.

Perchonok, M. H. (2001) National Aeronautics and Space Administration, Lyndon B. Johnson Space Center, Houston, Texas. Personal communication, 07 September 2001.

Perchonok, M. H., Stevens, I., Swango, B. E., and Toerne, M. E. (2002) "Advanced Life Support Food Subsystem Salad Crops Requirements," SAE Paper 2002-01-2477, 32nd International Conference on Environmental Systems, San Antonio, Texas, Society of Automotive Engineers, Warrendale, Pennsylvania.

Perry, J. L. (1995) "Trace Chemical Containment Generation Rates for Spacecraft Contamination Control System Design," NASA-TM-108497, National Aeronautics and Space Administration, George C. Marshall Space Flight Center, Huntsville, Alabama, August 1995.

Perry, J. L. (1998) "Elements of Spacecraft Cabin Air Quality Control Design," NASA-TP-1998-207978, National Aeronautics and Space Administration, George C. Marshall Space Flight Center, Huntsville, Alabama, May 1998. This document is not available for general release.

Perry, J. L., Cole, H. E., and El-Lessy, H. N. (2005) "An Assessment of the *International Space Station*'s Trace Contaminant Control Subassembly Process Economics," NASA/TM-2005-214008, National Aeronautics and Space Administration, Marshall Space Flight Center, Huntsville, Alabama, August 2005.

Piñero, L. R., Bond, T., Okada, D., Pyter, J., and Wiseman, S. (2002) "Design of a Modular 5 kW Power Processing Unit for the Next Generation 40-cm Ion Engine," NASA/TM-2002-211359, National Aeronautics and Space Administration, Glenn Research Center, Cleveland, Ohio, February 2002.

Pisharody, S., Wignarajah, K., and Fisher, J. (2002) "Oxygen Penalty for Waste Oxidation in an Advanced Life Support System - A Systems Approach," SAE Paper 2002-01-2396, 32nd International Conference on Environmental Systems, San Antonio, Texas, Society of Automotive Engineers, Warrendale, Pennsylvania.

Putnam, D. F. (1971) "Composition and Concentrative Properties of Human Urine," NASA-CR-1802, National Aeronautics and Space Administration, Washington, D. C. Prepared by McDonnell Douglas Astronautics Company – Western Division, Huntington Beach, California.

Ramsey, S. D. (2002) National Aeronautics and Space Administration, Lyndon B. Johnson Space Center, Houston, Texas. Personal communication, 17 April 2002.

Ray, C. D., Littles, J. W., Blair, J. L., and Jagow, R. B. (1979) "Design and Development of a Trace Contaminant Removal Canister for Spacelab," ASME Paper 79-ENAs-16, American Society of Mechanical Engineers, New York, New York.

Ray, C. D., and Stanley, J. B. (1977) "Spacelab baseline ECS trace contaminant removal test program," NASA-TM-78135, National Aeronautics and Space Administration, Washington, D. C., 01 September 1977

Reimers and McDonald (1992) "ISS Laundry Decision Package," National Aeronautics and Space Administration. Internal NASA presentation, 23 January 1992.

Richards, J. T., Edney, S. L., Yorio, M. C., Stutte, G. W., Sisko, M. D., Cranston, N., and Wheeler, R. M. (2005) "Effect of Light Intensity and Temperature on Yield of Salad Crops for Space Exploration," SAE Paper 2005-01-2820, 35th International Conference on Environmental Systems, Rome, Italy, Society of Automotive Engineers, Warrendale, Pennsylvania.

Richards, J. T., Edney, S. L., Yorio, M. C., Stutte, G. W., and Wheeler, R. M. (2006) "Yields of Salad Crops Grown Under Potential Lunar and Mars Habitat Environments: Effect of Temperature and Lighting," SAE Paper 2006-01-2029, 36th International Conference on Environmental Systems, Norfolk, Virginia, Society of Automotive Engineers, Warrendale, Pennsylvania.

RMD (2001) "Advanced Life Support Systems Integration, Modeling, and Analysis Reference Missions Document," JSC-39502, Revision A, Stafford, K. W., Jerng, L. T., Drysdale, A. E., Maxwell, S., and Levri, J. A., Authors, Ewert, M. K., and Hanford, A. J., Editors, National Aeronautics and Space Administration, Lyndon B. Johnson Space Center, Houston, Texas, November, 2001.

http://advlife.support.jsc.nasa.gov

Rodriguez, V., and England, W. (1998) "Rack to Mini Pressurized Logistics Module Interface Control Document (ICD), Part 1," SSP-41017, Revision D, National Aeronautics and Space Administration, International Space Station Program, Lyndon B. Johnson Space Center, Houston, Texas. This document is dated 13 November 1998. Revision D was signed on 01 May 2000 and published on 10 April 2001.

Rodriguez, L. F., and Bell, S. (2004) "Verification of the Modified Energy Cascade Model – Report," National Research Council at NASA Lyndon B. Johnson Space Center, Houston, Texas. Internal NASA document, 02 March 2004. See also: Cavazzoni, J. (2004) Rutgers, The State University of New Jersey, New Brunswick, New Jersey. Personal communication, 05 March 2004.

Rouen, M. N. (2001) National Aeronautics and Space Administration, Lyndon B. Johnson Space Center, Houston, Texas. Personal communication, 27 February 2001.

Rouen, M. N. (2002) National Aeronautics and Space Administration, Lyndon B. Johnson Space Center, Houston, Texas. Personal communication, 25 March 2002 based on a review of NASA Apollo documents.

Ruminsky, K. A., and Hentges, D. L. (2000) "Development of a Ten-Day Cycle Menu for Advanced Life Support," *Life Support and Biosphere Science, International Journal of Earth/Space*, **7**, pp. 193-201.

Sager, J. C. (1999) National Aeronautics and Space Administration, John F. Kennedy Space Center, Florida. Personal communication.

Sager, J. C. (2006) National Aeronautics and Space Administration, John F. Kennedy Space Center, Florida. Personal communication.

Schoppa, W. (1997) "ITCS Fluids White Paper," HDID-A44B-827, Lockheed Martin Space Mission Systems and Services, Houston, Texas.

Schubert, F. H., Wynveen, R. A., and Quattrone, P. D. (1984) "Advanced Regenerative Environmental Control and Life Support Systems: Air and Water Regeneration," *Advances in Space Research*, **4**, pp. 279-288.

Shepherd, C. K. (2001) Lockheed Martin Space Operations, Houston, Texas. Personal communication dated 15 October 2001.

SODB (1995) "Shuttle Operational Data Book, Volume II, Mission Mass Properties," NSTS-08934, Volume II, Revision C, Mistrot, J. W., Editor, National Aeronautics and Space Administration, Lyndon B. Johnson Space Center, Houston, Texas, January 1995.

Sridhar, K. R., Finn, J., and Kliss, M. (1998) "ISRU Technologies for Mars Life Support," The University of Arizona in Tucson, Arizona, and the National Aeronautics and Space Administration, Ames Research Center, Moffett Field, California. Presentation to the Advanced Life Support Systems Analysis Workshop, 27 March 1998.

Toups, L., Shepherd, C., Fawcett, M., DiPalermo, P., and Winter, J. (2001) "Crew Refrigerator Freezer Rack RFR," V6.0, National Aeronautics and Space Administration, Lyndon B. Johnson Space Center, Houston, Texas. Internal NASA technical interchange meeting package, 17 April 2001.

Tri, T. O. (2000) "Scoping Document for the BIO-Plex 120-Day Test," Revision D, National Aeronautics and Space Administration, Lyndon B. Johnson Space Center, Houston, Texas. Internal NASA document dated 03 October 2000.

Tucker, D., Sandstead, H., Logan, G., Jr., Klevay, L., Mahalko, J., Johnson, L., Inman, L., and Inglett, G. (1981) "Dietary fiber and personality factors as determinants of stool output," *Gastroenterology*, **81**, pp. 879-883.

Tucker, J. M. (2006) "HSIR Action to ECP to provide Sensible Heat Data, Respiratory Exchange Data, and Water Production Data For an Exercising Crew Member," National Aeronautics and Space Administration, Lyndon B. Johnson Space Center, Houston, Texas. Internal NASA technical memorandum, June 2006.

Verostko, C. E., and Carrier, C. (2006) "Ersatz Formulations for Testing Water Recovery System Processes," JSC 65336 (CTSD-ADV-612), National Aeronautics and Space Administration, Lyndon B. Johnson Space Center, Houston, Texas, April 2006.

Verostko, C. E., Garcia, R., Sauer, R., Reysa, R. P., Linton, A. T., and Elms, T. (1989) "Test Results on Reuse of Reclaimed Shower Water – A Summary," Paper SAE 891443, 19th Intersociety Conference on Environmental Systems, San Diego, California, Society of Automotive Engineers, Warrendale, Pennsylvania.

Vodovotz, Y. (1999) National Aeronautics and Space Administration, Lyndon B. Johnson Space Center, Houston, Texas. Personal communication, May 1999.

Volk, T., Bugbee, B., and Wheeler, R. (1995) "An Approach to Crop Modeling With the Energy Cascade," *Life Support and Biosphere Science, International Journal of Earth/Space*, **1**, pp. 119-127.

Vonau, W. L., Jr. (2002) "Examination of Study on Equivalent System Mass for Advance Refrigerator Technologies," MSAD-02-0115, Lockheed Martin Space Operations, Houston, Texas.

Weast, R. C., and Astle, M. J. (1979) *CRC Handbook of Chemistry and Physics*, 60th Edition, CRC Press, Inc., Boca Raton, Florida.

Weaver, G. S., and Westheimer, D. T. (2002) "Advanced Radiator Concepts and Carbon Velvet Cold Plate Thermal/Vacuum Test Post-Test Report," JSC-47823 (CTSD-ADV-485), National Aeronautics and Space Administration, Lyndon B. Johnson Space Center, Houston, Texas.

Wheeler, R. M. (2001a) National Aeronautics and Space Administration, John F. Kennedy Space Center, Kennedy Space Center, Florida. From comments during an ALS project telecon, January 2001.

Wheeler, R. M. (2001b) National Aeronautics and Space Administration, John F. Kennedy Space Center, Kennedy Space Center, Florida. Personal communication from 7 May 2001. This information is a compilation of multiple sources as provided by R. M. Wheeler.

Wheeler, R. M., Corey, K. A., Sager, J. C., and Knott, W. M. (1993) "Gas Exchange Characteristics of Wheat Stands Grown in a Closed, Controlled Environment," *Crop Science*, **33**, pp. 161-168.

Wheeler, R. M., Mackowiak, C. L., Stutte, G. W., Sager, J. C., Yorio, N. C., Ruffe, L.M., Fortson, R. E., Dreschel, T. W., Knott, W. M., and Corey, K. A. (1995) "NASA's Biomass Production Chamber: A Testbed for Bioregenerative Life Support Studies," *Advances in Space Research*, **18**, pp. 215-224.

Wheeler, R. M., Mackowiak, C. L., Sager, J. C., Knott, W. M., and Berry, W. L. (1996) "Proximate Composition of CELSS Crops Grown in NASA's Biomass Production Chamber," *Advances in Space Research*, **18** (4/5), pp. 43-47.

Wheeler, R. M., Mackowiak, C. L., Berry, W. L., Stutte, G. W., Yorio, N. C., and Ruffe, L. M. (1997) "Ten Years of Hydroponic Research in NASA's CELSS Biomass Production Chamber," Proceedings of the 18th Annual Conference, Hydroponic Society of America, pp. 103-113.

Wheeler, R. M., Mackowiak, C. L., Berry, W. L., Stutte, G. W., Yorio, N. C., Ruffe, L. M., and Sager, J. C. (1999) "Nutrient, acid, and water budgets of hydroponically grown crops," *Acta Horticulturae*, **481**, pp. 655-661.

Wheeler, R. M., Sager, J. C., Prince, R. P., Knott, W. M., Mackowiak, C. L., Stutte, G. W., Yorio, N. C., Ruffe, L. M., Peterson, B. V., Goins, G. D., Hinkle, C. R., and Berry, W. L. (2003) "Crop Production for Advanced Life Support Systems – Observations from the Kennedy Space Center Breadboard Project," NASA-TM-2003-211184, National Aeronautics and Space Administration, John F. Kennedy Space Center, Florida, February 2003.

Wheeler, R. M., Mackowiak, C. L., Stutte, G. W., Yorio, N. C., Ruffe, L. M., Sager, J. C., and Knott, W. M. (2006) "Crop Production Data for Bioregenerative Life Support: Observations from NASA's Kennedy Space Center," COSPAR Abstract F4.1-0010-06, Committee on Space Research, International Council for Science, Paris, France.

Wieland, P. O. (1998a) "Living Together in Space: The Design and Operation of the Life Support Systems on the International Space Station," Volume 1, NASA-TM-1998-206956, National Aeronautics and Space Administration, Marshall Space Flight Center, Huntsville, Alabama.

Wieland, P. O. (1998b) "Living Together in Space: The Design and Operation of the Life Support Systems on the International Space Station," Volume 2, NASA-TM-1998-206956, National Aeronautics and Space Administration, Marshall Space Flight Center, Huntsville, Alabama.

Williams, D. R. (1997) National Space Science Data Center, National Aeronautics and Space Administration, Goddard Space Flight Center, Greenbelt, Maryland, 19 June 1997.

http://nssdc.gsfc.nasa.gov/planetary/factsheet/moonfact.html

Winter, J., Zell, M., Hummelsberger, B., Hess, M. P., Eicher, L., DiPalermo, P., Savage, Ch., Tan, G., Cassese, F., Santachiara, D., Deceuninck, H., Townsend, P., Kutch, M., Renz, M., and Rapp, U. (2001) "The Crew Refrigerator/Freezer Rack for the International Space Station," SAE paper 2001-01-2223, 31st International Conference on Environmental Systems, Society of Automotive Engineers, Warrendale, Pennsylvania.

Wydeven, T., and Golub, M. A. (1990) "Generation Rates and Chemical Compositions of Waste Streams in a Typical Crewed Space Habitat," NASA Technical Memorandum 102799, National Aeronautics and Space Administration, Ames Research Center, Moffett Field, California.

Wydeven, T., and Golub, M. A., (1991) "Waste Streams in a Crewed Space Habitat," *Waste Management and Research (1991)*, **9**, pp. 91-101

Wydeven, T., Tremor, J., Koo, C., and Jacquez, R. (1989) "Sources and Processing of CELSS Wastes," *Adv. Space Res.*, **9**, No. 8, pp. 85-97.

7 APPENDICES

7.1 APPENDIX A: ACRONYMS AND ABBREVIATIONS [204]

Symbol	Definition	Symbol	Definition
ALS	Advanced Life Support	KSC	Kennedy Space Center
ALS RD	ALS Requirements Document	LMLSTP	Lunar Mars Life Support Test Program (integrated test)
ATCS	active thermal control system	MAG	Maximum Absorption Garment (for EMU)
BDB	Bioastronautics Data Book	MEC	Modified Energy Cascade models
BIO-Plex	Bioregenerative Planetary Life Support Systems Test Complex	MSIS	Man-Systems Integration Standards
BPC	Biomass Production Chamber at KSC	MW	molecular weight or Megawatt if used as a unit (See below.)
BVAD	Baseline Values and Assumptions Document (This document)	n/a	not applicable
CI	controlled inorganic (compound)	NASA	National Aeronautics and Space Administration
CO_2	carbon dioxide	NRC	National Research Council
COP_S	overall system thermodynamic coefficient of performance	O_2	oxygen
CTMP	crewtime-mass-penalty [kg/CM-h]	p[gas]	partial pressure exerted by gas
CTSD	Crew and Thermal Systems Division	PAR	photosynthetically active radiation
dw	dry mass (dry "weight")	pH	potential of hydrogen
EATCS	external active thermal control system	PLSS	portable life support system
ELS	Exploration Life Support (Project)	PPF	photosynthetic photon flux
EMC	Environmental Monitoring and Control (Interface)	PV	photovoltaic
EMU	extravehicular mobility unit (space suit)	RDA	recommended dietary allowance
ESCG	Engineering and Sciences Contract Group	RMD	Reference Missions Document
ESM	equivalent system mass	R_S	system composite thermal resistance
ESM GD	ESM Guidelines Document	SI	Système Internationale d'Unités (Metric System)
ETCS	external thermal control system	SIMA	Systems Integration, Modeling, and Analysis (element of ELS Project)
EVA	extravehicular activity	SMAC	spacecraft maximum allowable concentration
ffm	frozen food mass	SODB	Shuttle Operational Data Book
fw	fresh mass (fresh "weight")	SP100	type of nuclear reactor
HPS	high pressure sodium, a type of lamp	STS	space transportation system
ISRU	in-situ resource utilization	SVCHp	solar vapor-compression heat pump
ISS	International Space Station	TBD	to be determined
IST	Invariantly-Scheduled Time	TRRJ	thermal radiator rotary joint
ITCS	internal thermal control system	$VO_{2\,max}$	maximal rate of oxygen uptake by the whole-body during exercise
IUPAC	International Union of Pure and Applied Chemistry	VST	Variably-Scheduled Time
IVA	intra vehicular activity	w/	with
JCPC	Joint Crew Provisioning Catalog	w/o	without
JSC	Johnson Space Center	$\hat{W}_{RF}$	specific power consumption for a cooled volume within a cabinet

[204] Symbols specific to the crop models in Section 5.2.9.4 are defined in Table 5.2.32 and Table 5.2.44.

7.2 APPENDIX B: ABBREVIATIONS FOR UNITS

Symbol	Actual Unit	Physical Correspondence
Btu	British thermal unit	energy (English)
°C	degrees Centigrade	temperature
CM	crewmember	person
CM-d	crewmember-day	crewtime
CM-h	crewmember-hour	crewtime
CM-wk	crewmember-week	crewtime
CM-℘	crewmember-menstrual period	crewtime
c	centi-	prefix
d	day	time
°F	degrees Fahrenheit	temperature (English)
ft	foot	length (English)
g	gram	mass
h	hour	time
IU	International Unit	see specific usage
J	Joule	energy
K	Kelvin	absolute temperature
k	kilo-	prefix
kW	kilowatt	power
kW_e	kilowatt electric	electric power
kW_{th}	kilowatt thermal	thermal heat
L	liter	volume
lb_m	pounds (mass)	mass (English)
M	mega-	prefix
MW_e	megawatt electric	electric power
m	meter	length
m^2	square meter	area
m^3	cubic meter	volume
m	milli-	prefix
meq/L	milli-equivalents per liter	concentration
min	minute	time
mol	mole	mole
N	Newton	force
Pa	Pascal	pressure
ppm	parts per million	concentration
psia	pounds (force) per square inch, absolute	absolute pressure (English)
S	Siemens	conductivity
s	second	time
W	Watt	power
wk	week	time
y	year	time
µ	micro-	prefix

7.3 APPENDIX C: LIFE SUPPORT EQUIPMENT PARAMETERS FROM THE ADVANCED LIFE SUPPORT DATABASE [205]

7.3.1 INTERNATIONAL SPACE STATION

Table 7.3.1 International Space Station Atmosphere Control and Supply

Assembly or Component	Mass [kg]	Volume [m³]	Length [m]	Width or Diameter [m]	Height [m]	Peak Power [W]	Operational Average Power [W]	MTBF [h]	CMMTTR [h]	Life Limit [y]	No.
Cabin Pressure Sensor [206]	0.3316 (1)	0.000369 (2)	0.0444 (1)	0.0762 (1)	0.1092 (1)						1
Manual Pressurization Equalization Valve (MPEV) [207]	1.0795 (1)	0.002394 (2)	0.1143 (1)	0.1676 (1)	0.1249 (1)						9
MPEV with Muffler [207]	0.1134 (1)	0.000151 (2)	0.0355 (1)	0.0762 (1)	0.0558 (1)						1
Negative Pressure Relief Valve [208]	0.9343 (1)	0.002836 (2)	0.163 (1)	0.163 (1)	0.1066 (1)						6
Nitrogen / Oxygen Manual Isolation Valve [209]	3.928 (3)										1
Nitrogen Manual Isolation Valve	1.0432 (3)	0.002548 (7)	0.1905 (4)	0.0355 (4)	0.08 (4)			1.0×10^{6}	0.5		1
Oxygen Manual Isolation Valve	0.9616 (3)	0.002548 (7)						1.0×10^{6}	0.5		3
Nitrogen / Oxygen Pressure Restrictor [207]	0.9071 (4)	0.000189 (2)		0.0355 (4)	0.1905 (4)						1
Nitrogen / Oxygen Pressure Sensor [206]	0.8436 (3)	0.002548 (3)		0.0317 (4)	0.1778 (4)						4
Nitrogen / Oxygen Pressure Vessel [210]	108.8616 (4)			0.9804 (4)	1.397 (4)						1
Nitrogen / Oxygen Regulator / Relief Valve Assembly [208]	7.8										1
Low Pressure Nitrogen Regulator / Relief Valve Assembly	1.9504 (4)	0.002548 (3)	0.2095 (4)	0.1333 (4)	0.0889 (4)			300,000 (3)	0.52 (3)		1 (3)
Low Pressure Oxygen Regulator / Relief Valve Assembly	1.9504 (4)	0.002548 (3)	0.2095 (4)	0.1333 (4)	0.0889 (4)			300,000 (3)	0.92 (3)		2 (3)
Medium Pressure Oxygen Regulator / Relief Valve Assembly	1.9504 (4)	0.002548 (4)	0.2095 (4)	0.1333 (4)	0.0889 (4)			300,000 (3)	0.92 (3)		1 (7)
Oxygen / Nitrogen Latching Motor Valve [209]	4.9 (3)										1
Nitrogen Latching Motor Valves	1.6329 (3)	0.004531 (3)	0.2032 (4)	0.1841 (4)	0.1196 (4)			500,000	0.84		1
Oxygen Latching Motor Valves	1.6329 (3)	0.004531 (3)	0.2032 (4)	0.1841 (4)	0.1196 (4)			500,000	0.95		2

205 See Database (2002)
206 Function: atmospheric pressure monitoring
207 Function: pressure equalization
208 Function: pressure relief
209 Function: nitrogen and oxygen flow distribution
210 Function: nitrogen and oxygen storage

References: (1) de Vera (1999); (2) Calculation; (3) MADS (2001); (4) de Vera (1998b); (5) NASA (2001b); (6) Niehuss (2001); (7) NASA (2001c); (8) de Vera (1998a); (9) Perry, *et al.* (2005).
Note: Hardware entries in *italics* are components of assembly entries in **bold** type.

Table 7.3.1 International Space Station Atmosphere Control and Supply (continued)

Assembly or Component	Mass [kg]	Volume [m³]	Length [m]	Width or Diameter [m]	Height [m]	Peak Power [W]	Operational Average Power [W]	MTBF [h]	CMMTTR [h]	Life Limit [y]	No.
Oxygen Generation Assembly [211]	446										1
Hydrogen	161.6176 (6)	0.146697 (6)	0.7874 (6)	0.4318 (6)	0.4318 (6)			27,156 (6)	1.1 (6)	2.38 (6)	1 (6)
Hydrogen Sensor	4.3545 (6)	0.003398 (6)	0.1778 (6)	0.1524 (6)	0.127 (6)			61,845.6 (6)	0.6 (6)	0.25 (6)	1 (6)
Inlet Deionizing Bed	28.6675 (6)	0.029452 (6)	0.6146 (6)	0.2362 (6)	0.2032 (6)			296,701.2 (6)	0.233 (6)	6 (6)	1 (6)
Nitrogen Purge ORU	34.2468 (6)							138,408 (6)			1 (6)
Oxygen Outlet	48.1723 (6)	0.031152 (6)	0.3556 (6)	0.3175 (6)	0.2768 (6)			98,112 (6)	0.65 (6)	10 (6)	1 (6)
Power Supply Module	42.6384 (6)	0.064852 (6)	0.6096 (6)	0.381 (6)	0.2794 (6)			47,479.2 (6)	0.583 (6)	4.17 (6)	1 (6)
Process Controller	47.0836 (6)	0.083827 (6)	0.7213 (6)	0.4445 (6)	0.2616 (6)			103,280.4 (6)	1.05 (6)	7.72 (6)	1 (6)
Pump	17.9625 (6)	0.010152 (6)	0.2794 (6)	0.2286 (6)	0.1574 (6)			144,540 (6)	0.583 (6)	1 (6)	1 (6)
Water	61.0545 (6)	0.075614 (6)	0.4572 (6)	0.4521 (6)	0.3657 (6)			33,288 (6)	0.966 (6)	2.92 (6)	1 (6)
Oxygen Relief Valve Assembly [212]	1.9504 (4)	0.000849 (3)	0.1524 (4)	0.2189 (4)	0.0533 (4)						1
Portable Breathing Apparatus Quick Disconnect [213]	0.1514 (1)		0.0177 (1)	0.019 (1)	0.0508 (1)						1
Positive Pressure Relief Valve [212]	1.3607 (1)		0.179 (1)	0.1143 (1)	0.1524 (1)						1
Pressure Control Panel [214]	22.68 (5)	0.035116 (3)	0.4826 (3)	0.3149 (3)	0.2311 (3)						1
Firmware Controller	4.8897 (8)	0.005608 (8)	0.2057 (8)	0.1651 (8)	0.1651 (8)	15 (8)	12 (8)				1
Nitrogen Isolation Valve	1.2927 (8)	0.000849 (8)		0.0095 (8)		50 (8)	38 (8)				1
Oxygen Isolation Valve	1.2927 (8)	0.000849 (8)		0.0095 (8)		50 (8)	38 (8)				1
Vent and Relief Valve [212]	5.4432 (8)	0.01416 (8)		0.0558 (8)		30 (8)					1
Vent and Relief Control Valve (VRCV)				0.0558 (8)							1
Vent and Relief Isolation (VRIV)				0.0558 (8)							1

[211] Function: oxygen generation
[212] Function: pressure relief
[213] Function: emergency equipment
[214] Function: atmospheric pressure control

References: (1) de Vera (1999); (2) Calculation; (3) MADS (2001); (4) de Vera (1998b); (5) NASA (2001b); (6) Niehuss (2001); (7) NASA (2001c); (8) de Vera (1998a); (9) Perry, *et al.* (2005).
Note: Hardware entries in *italics* are components of assembly entries in **bold** type.

Table 7.3.2 International Space Station Atmosphere Revitalization Subsystem

Assembly or Component	Mass [kg]	Volume [m³]	Length [m]	Width or Diameter [m]	Height [m]	Peak Power [W]	Operational Average Power [W]	MTBF [h]	CMMTTR [h]	Life Limit [y]	No.
3-way Sample Valve [215]	1.9731 (1)	0.002322 (1)	0.1778 (1)	0.1143 (1)	0.1143 (1)						1
Carbon Dioxide Removal Assembly [216]	195.3793 (8)	0.387984 (8)				1,487 (8)	860 (8)				1
Air Pump, Two-Stage, ORU	10.8861 (8)	0.004531 (3)	0.084 (3)	0.234 (3)	0.234 (3)	245 (8)	23 (8)	156,200 (3)	1.53 (3)	15.29 (3)	1 (3)
Blower	5.5792 (8)	0.025488	0.61 (3)	0.203 (3)	0.203 (3)	170 (8)	170 (8)	129,700 (3)	1.67 (3)	10 (3)	1
Check Valves	39.9159 (8)	0.178416 (8)				960 (8)	346 (8)				1
Desiccant Beds	42.6384 (3)	0.08496 (3)	1.0922 (3)	0.3048 (3)	0.254 (3)			77,100 (3)	2.28 (3)		2
Heat Controller	3.3112 (8)	0.008496 (3)	0.178 (3)	0.142 (3)	0.216 (3)	32 (8)	19 (8)	242,700 (3)	0.55 (3)		2 (3)
Precooler	5.5792 (8)	0.025488	0.61 (3)	0.203 (3)	0.203 (3)			129,700 (3)	1.67 (3)	10 (3)	1
Pump Fan Motor Controller	2.7215 (8)	0.005664 (3)	0.14 (3)	0.089 (3)	0.165 (3)	20 (8)	2 (8)	2.272×10^{6} (3)	0.52 (3)		2 (3)
Selector Valves	3.039 (8)	0.001699 (8)	0.155 (3)	0.109 (3)	0.109 (3)	60 (8)	1 (8)	117,000 (3)	0.94 (3)	10.61 (3)	6 (3)
Sorbent Beds (Zeolite)	42.6384 (3)	0.08496 (3)	1.0922 (3)	0.3048 (3)	0.254 (3)			77,100 (3)	2.28 (3)		2
Catalyst Element Assembly [217]	5.2616 (1)	0.004729 (1)	0.0939 (1)	0.6604 (1)	0.0762 (1)						4
Major Constituent Analyzer [218]	54.7483 (8)	0.43896 (8)					87.6 (8)				1
ORU 1-Data and Control Assembly	8.0196 (3)	0.013214 (3)	0.1905 (3)	0.2844 (3)	0.2438 (3)		34.9 (8)	43,500 (3)	0.84 (3)	10 (3)	1 (5)
ORU 2-Mass Spectrometry Assembly	13.304 (3)	0.023794 (3)	0.254 (3)	0.4191 (3)	0.2235 (3)		31.8 (8)	8,180 (3)	0.8 (3)	4.5 (3)	1
ORU 4-Low Voltage Power Supply Assembly	5.67 (3)	0.005333 (3)	0.1574 (3)	0.1778 (3)	0.1905 (3)		30.8 (8)	199,000 (3)	0.82 (3)		1 (3)
ORU 5-Series Sample Pump Assembly	3.1298 (3)	0.004961 (3)	0.2209 (3)	0.1016 (3)	0.1981 (3)		4 (8)	11,900 (3)	0.71 (3)	2 (3)	1 (5)
ORU 6-Sample Distribution Assembly	2.1092 (3)	0.003613 (3)	0.16 (3)	0.127 (3)	0.1778 (3)		0.1 (8)	70,900 (3)	0.71 (3)	15 (3)	1 (5)
ORU 7-EMI Filter Assembly	1.4515 (3)	0.001699 (3)	0.1752 (3)	0.0744 (3)	0.1303 (3)		1.8 (8)	1.16×10^{6} (3)	0.71 (3)		1 (3)
ORU 8-Verification Gas Assembly	5.7607 (3)	0.013722 (3)	0.3098 (3)	0.1981 (3)	0.2235 (3)		0.1 (8)	52,100 (3)	0.74 (3)	1.5 (8)	1 (3)
Manual Sample Valve [215]	0.2267 (1)	0.000589 (1)	0.1016 (1)	0.0762 (1)	0.0762 (1)						1
Sample Distribution Assembly [215]											1
Trace Contaminant Control Subsystem [219]	79.8318 (8)	0.271866 (2)	0.6461 (8)	0.4508 (8)	0.9331 (8)	250 (8)	180 (8)				1
Activated Charcoal Bed	36.65 (8)	0.075699 (8)	0.8255 (3)	0.3886 (3)	0.3505 (3)			215,000 (3)	0.7 (3)	4.5 (9)	1 (3)
Blower	2.9392 (8)	0.005899 (8)				51.75 (8)	34.5 (8)	121,500 (3)	0.38 (3)	5 (3)	1
Catalytic Oxidizer	11.0449 (8)	0.024312 (8)	0.2413 (3)	0.2463 (3)	0.4089 (3)	168 (8)	120.96 (8)	89,500 (3)	0.6 (3)	> 10 (9)	1 (3)
Electronic Interface Assembly	3.4201 (3)	0.003749 (3)	0.254 (3)	0.2235 (3)	0.066 (3)	7.64 (8)	7.64 (8)	483,000 (3)	0.59 (3)		1 (3)
Flowmeter	1.0886 (8)	0.000196 (8)	0.1778 (3)	0.0635 (3)	0.1651 (3)	11.5 (8)	11.5 (8)	936,000 (3)	0.35 (3)		1 (3)
Lithium Hydroxide Sorbent Bed	4.1049 (8)	0.007823 (8)	0.3759 (3)	0.16 (3)	0.2082 (3)			241,000 (3)	0.59 (3)	6 (9)	1

215 Function: air sampling
216 Function: carbon dioxide control
217 Function: control gaseous contaminants
218 Function: monitor atmospheric partial pressure
219 Function: control gaseous contaminants

References: (1) de Vera (1999); (2) Calculation; (3) MADS (2001); (4) de Vera (1998b); (5) NASA (2001b); (6) Niehuss (2001); (7) NASA (2001c); (8) de Vera (1998a); (9) Perry, *et al.* (2005).
Note: Hardware entries in *italics* are components of assembly entries in **bold** type.

Table 7.3.3 International Space Station Temperature and Humidity Control

Assembly or Component	Mass [kg]	Volume [m³]	Length [m]	Width or Diameter [m]	Height [m]	Peak Power [W]	Operational Average Power [W]	MTBF [h]	CMMTTR [h]	Life Limit [y]	No.
Avionics Air Assembly [220]	12.519 (3)	0.033134 (3)	0.5969 (3)	0.2794 (3)	0.1981 (3)		175 (8)				1
Bacteria Filter Assembly [221]	26.36 (5)	0.018781 (5)	0.785 (5)	0.145 (5)	0.165 (5)						1
Bacteria Filter Element	2.0275 (3)	0.009062 (3)	0.7112 (3)	0.1016 (3)	0.127 (3)			2.0×10^{8} (3)	0.1 (3)		13
Cabin Diffuser Assembly [222]	0.82 (5)	0.003398 (3)	0.0635 (3)	0.1676 (3)	0.3175 (3)						6
Charcoal Catalytic Filter Element [221]	4.46	0.00921	0.711	0.102	0.127						1
Common Cabin Air Assembly [223]	96.161 (8)					705 (8)	469 (8)				1
Condensing Heat Exchanger	49.71 (5)	0.393293 (5)	1.016 (5)	0.762 (5)	0.508 (5)			832,600 (3)	1.56 (3)		1
Electronic Interface Box (EIB)	4.037 (3)	0.017275 (3)	0.3302 (3)	0.2286 (3)	0.2286 (3)			2.3506×10^{6} (3)	0.83 (3)		2
Fan Delta Pressure Sensor	0.4535 (8)	0.000163 (8)	0.0558 (3)	0.0406 (3)	0.1473 (3)		0.24 (8)	1.25×10^{6} (3)	0.94 (3)		1
Heat Exchanger Liquid Sensor	0.635 (8)	0.000566 (8)	0.098 (3)	0.0546 (3)	0.0995 (3)		0.009 (8)	1.1363×10^{6} (3)	0.47 (3)		2
Inlet ORU	25.31 (5)	0.130875 (3)	0.5905 (8)	0.4826 (8)	0.4889 (8)	469 (8)		332,900	0.39		1
Pressure Transducer	0.4762 (3)	0.000283 (3)	0.1524 (3)	0.0406 (3)	0.0406 (3)		0.24 (8)	1.25×10^{6} (3)	0.92 (3)	15	1
Temperature Control Check Valve (TCCV)	7.4526 (3)	0.00708 (3)	0.381 (3)	0.1905 (3)	0.0965 (3)			32,880 (3)	0.44 (3)		2
Temperature Sensor	0.263 (3)	0.001416 (3)	0.1046 (3)	0.1206 (3)	0.1016 (3)			3.7594×10^{7} (3)	0.53 (3)		4
Water Separator	11.93 (3)	0.058285 (3)	0.371 (3)	0.356 (3)	0.434 (3)			130,800 (3)	0.79 (3)	5	2
Water Separator Liquid Sensor	0.635 (8)	0.000566 (8)					0.009 (8)				1
Damper Valve Assembly [224]	2.7215 (1)	0.006125 (1)	0.1682 (1)	0.1574 (1)	0.2311 (1)						4
Intermodule Ventilation Muffler [224]		0.000237 (1)	0.0762 (1)	0.0558 (1)	0.0558 (1)						9
Intermodule Ventilation Caps [224]	1.9										1
IMV cap	0.635 (1)	0.00192 (1)	0.1587 (1)	0.1587 (1)	0.0762 (1)						1
IMV Cap Flange Saver	0.4989 (1)	0.00192 (2)	0.1587 (1)	0.1587 (1)	0.0762 (1)						1
IMV Leak Check Cap	0.7257 (1)	0.00192 (2)	0.1587 (1)	0.1587 (1)	0.0762 (1)						1
Intermodule Ventilation Fan [224]	4.1657 (1)	0.009283 (2)	0.2413 (1)	0.226 (1)	0.1701 (1)		55 (1)				1
Intermodule Ventilation Valve [224]	5.2162 (1)	0.008284 (2)	0.3256 (1)	0.1579 (1)	0.161 (1)	20 (1)	7.68 (1)				1
Node 1 Cabin Fan [222]	24.9474 (1)	0.13935 (1)	0.5905 (1)	0.4826 (1)	0.4889 (1)	1,000 (1)	180 (1)				1
Cabin Fan Delta Pressure Sensor	0.4535 (1)	0.000163 (1)					0.24 (1)				1

[220] Function: heat removal
[221] Function: particulate and microbial growth control
[222] Function: intramodule atmosphere circulation
[223] Function: temperature and humidity control
[224] Function: intermodule atmosphere circulation

References: (1) de Vera (1999); (2) Calculation; (3) MADS (2001); (4) de Vera (1998b); (5) NASA (2001b); (6) Niehuss (2001); (7) NASA (2001c); (8) de Vera (1998a); (9) Perry, *et al.* (2005).
Note: Hardware entries in *italics* are components of assembly entries in **bold** type.

Table 7.3.4 International Space Station Fire Detection and Suppression

Assembly or Component	Mass [kg]	Volume [m³]	Length [m]	Width or Diameter [m]	Height [m]	Peak Power [W]	Operational Average Power [W]	MTBF [h]	CMMTTR [h]	Life Limit [y]	No.
Portable Fire Extinguisher [225]	7.7563 (1)	0.038409 (5)	0.4851 (1)	0.2606 (1)	0.2606 (1)						1
Smoke Detector [226]	1.5422 (1)	0.001968 (2)	0.1143 (1)	0.1301 (1)	0.1323 (1)		1.48 (1)				1

Table 7.3.5 International Space Station Vacuum Services

Assembly or Component	Mass [kg]	Volume [m³]	Length [m]	Width or Diameter [m]	Height [m]	Peak Power [W]	Operational Average Power [W]	MTBF [h]	CMMTTR [h]	Life Limit [y]	No.
Load Control Assembly [227]	10.8861 (8)	0.01246 (3)	0.2794 (3)	0.2209 (3)	0.2032 (3)						1
On-orbit Support Equipment [227]	3.5										1
VES/VRS jumper	2.13 (5)	0.002556 (5)	0.991 (5)	0.051 (5)	0.051 (5)						1
VS Equalization tool	1.37 (5)	0.000932 (5)	0.206 (5)	0.069 (5)	0.066 (5)						1
Vacuum Exhaust System (VES) [227]	35.02 (8)					150 (8)	80 (8)				1
Cold Cathode Transducer	2.5401 (8)	0.002832 (3)	0.3429 (3)	0.1041 (3)	0.0787 (3)	10 (8)	5 (8)	400,384 (3)	1.22 (3)	0.5 (3)	1 (3)
Flexible Metal Bellows	0.8436 (8)			0.0635 (8)							1
Non-Propulsive Vent (NPV)	1.7917 (3)	0.005947 (3)	0.1524 (3)	0.3048 (3)	0.127 (3)			2.0×10^{8} (3)	0.19 (3)		1 (3)
Pirani Gauge Transducer	1.1339 (8)	0.001132 (3)	0.2184 (3)	0.1041 (3)	0.0482 (3)	3 (8)	1.5 (8)	307,800 (3)	1.11 (3)		1 (3)
Positive Pressure Transducer	0.4535 (8)	0.000283 (3)	0.1016 (3)	0.0254 (3)	0.0254 (3)			682,611 (3)	1.11 (3)		1 (3)
Rack Isolation Valve (1 inch)	1.8143 (8)	0.002548 (3)	0.1371 (3)	0.0939 (3)	0.2032 (3)		30 (8)	428,700 (3)	4.54 (3)		13 (3)
Vent Valve (2.5 inch)	4.672 (3)	0.00538 (3)	0.2794 (3)	0.1727 (3)	0.1143 (3)		30 (8)	347,425 (3)	0.43 (3)		1 (3)
Vacuum Resource System (VRS) [227]	8.8 (8)					150 (8)	80 (8)				1
Cold Cathode Transducer	2.5401 (8)	0.002832 (3)	0.3429 (3)	0.1041 (3)	0.0787 (3)	10 (8)	5 (8)	400,384 (3)	1.22 (3)	0.5 (3)	1 (3)
Pirani Gauge Transducer	1.1339 (8)	0.001132 (3)	0.2184 (3)	0.1041 (3)	0.0482 (3)	3 (8)	1.5 (8)	307,800 (3)	1.11 (3)		1 (3)
Positive Pressure Transducer	0.4535 (8)	0.000283 (3)	0.1016 (3)	0.0254 (3)	0.0254 (3)			682,611 (3)	1.11 (3)		1 (3)
Vent Valve (2.5 inch)	4.672 (3)	0.00538 (3)	0.2794 (3)	0.1727 (3)	0.1143 (3)		30 (8)	347,425 (3)	0.43 (3)		1 (3)

[225] Function: fire suppression
[226] Function: fire detection
[227] Function: supply vacuum services

References: (1) de Vera (1999); (2) Calculation; (3) MADS (2001); (4) de Vera (1998b); (5) NASA (2001b); (6) Niehuss (2001); (7) NASA (2001c); (8) de Vera (1998a); (9) Perry, *et al.* (2005).
Note: Hardware entries in *italics* are components of assembly entries in **bold** type.

Table 7.3.6 International Space Station Water Recovery and Management

Assembly or Component	Mass [kg]	Volume [m³]	Length [m]	Width or Diameter [m]	Height [m]	Peak Power [W]	Operational Average Power [W]	MTBF [h]	CMMTTR [h]	Life Limit [y]	No.
Condensate Water Storage Assembly [228]	21.3373 (3)	0.145848 (3)	0.9296 (3)	0.3962 (3)	0.3962 (3)						1
Contingency Water Container [228]	1.18 (5)	0.017663 (5)	0.61 (5)	0.381 (5)	0.076 (5)						1
Fuel Cell Water Tank [228]	72.1224 (3)	0.381187 (3)									1
Overboard Water Vent [229]	1.4605 (3)	0.007363 (3)	0.1955 (3)	0.193 (3)	0.193 (3)						2
Urine Processor Assembly [230]	291										1
Distillation Assembly	92.7612 (6)	0.142166 (6)	0.762 (6)	0.4318 (6)	0.4318 (6)			142,525.2 (6)	0.95 (6)	2 (6)	1 (6)
Firmware Controller Assembly	23.0882 (6)	0.028603 (6)	0.2921 (6)	0.3835 (6)	0.2565 (6)			27,331.2 (6)	1.15 (6)	2.4 (6)	1 (6)
Fluids Control and Pump Assembly	47.5826 (6)	0.073065 (6)	0.6883 (6)	0.4216 (6)	0.2514 (6)			90,140.4 (6)	2.066 (6)	4 (6)	1 (6)
Pressure Control and Pump Assembly	49.0795 (6)	0.115828 (6)	0.7416 (6)	0.4622 (6)	0.3378 (6)			181,507.2 (6)	0.916 (6)	2 (6)	1 (6)
Recycle Filter Tank Assembly	15.377 (6)	0.101102 (6)	0.8382 (6)	0.4318 (6)	0.2794 (6)			199,640.4 (6)	0.916 (6)	0.08 (6)	1 (6)
Separator Plumbing Assembly	16.7832 (6)	0.022939 (6)	0.8178 (6)	0.1727 (6)	0.1625 (6)			384,651.6 (6)	0.816 (6)	1 (6)	1 (6)
Wastewater Storage Tank Assembly	45.9496 (6)	0.039364 (6)	0.8255 (6)	0.2184 (6)	0.2184 (6)			184,222.8 (6)	1.716 (6)	10 (6)	1 (6)
Water Processor Assembly [231]	781										1
Catalytic Reactor	67.042 (6)	0.115545 (6)	0.7874 (6)	0.4191 (6)	0.3505 (6)			25,579.2 (6)	1.183 (6)	2.25 (6)	1 (6)
Gas Separator	39.1456 (6)	0.065985 (6)	0.7112 (6)	0.4064 (6)	0.2286 (6)			84,008.4 (6)	0.716 (6)	1 (6)	1 (6)
Ion Exchange Bed	13.0183 (6)	0.017275 (6)	0.8128 (6)	0.1905 (6)	0.1117 (6)			296,701.2 (6)	0.266 (6)	0.16 (6)	1 (6)
Microbial Check Valve	5.7607 (6)	0.006513 (6)	0.3175 (6)	0.1473 (6)	0.1397 (6)			143,488.8 (6)	0.266 (6)	1 (6)	1 (6)
Multifiltration Bed #1	149.2344 (6)	0.065702 (6)	0.7442 (6)	0.4394 (6)	0.2006 (6)			296,701.2 (6)	0.383 (6)	0.36 (6)	1 (6)
Multifiltration Bed #2	149.2344 (6)	0.065702 (6)	0.7442 (6)	0.4394 (6)	0.2006 (6)			296,701.2 (6)	0.383 (6)	0.36 (6)	1 (6)
Particulate Filter	32.2509 (6)	0.071649 (6)	0.6172 (6)	0.508 (6)	0.2286 (6)			717,356.4 (6)	0.25 (6)	0.22 (6)	1 (6)
pH Adjuster	2.5401 (6)	0.002548 (6)	0.2032 (6)	0.127 (6)	0.1016 (6)			137,181.6 (6)	0 (6)	1 (6)	1 (6)
Process Controller	44.9971 (6)	0.083827 (6)	0.7213 (6)	0.4445 (6)	0.2616 (6)			87,950.4 (6)	0.683 (6)	7.72 (6)	1 (6)
Pump Separator	31.3437 (6)	0.086942 (6)	0.7543 (6)	0.4318 (6)	0.2667 (6)			42,398.4 (6)	0.7 (6)	2 (6)	1 (6)
Reactor Health Sensor	16.8285 (6)	0.04248 (6)	0.6604 (6)	0.254 (6)	0.254 (6)			56,677.2 (6)	0.666 (6)	1 (6)	1 (6)
Sensor	4.8081 (6)	0.003398 (6)	0.1778 (6)	0.1524 (6)	0.127 (6)			143,664 (6)	0.65 (6)	10 (6)	1 (6)
Separator Filter	7.6658 (6)	0.010195 (6)	0.3429 (6)	0.1778 (6)	0.1676 (6)			359,072.4 (6)	0.233 (6)	0.84 (6)	1 (6)
Start-up Filter	9.4348 (6)	0.018408 (6)	0.635 (6)	0.2286 (6)	0.127 (6)			226,884 (6)	0 (8)	19.92 (6)	1 (6)
Wastewater	103.2847 (6)	0.163123 (6)	0.7772 (6)	0.4775 (6)	0.4394 (6)			53,611.2 (6)	0.65 (6)	4.71 (6)	1 (6)
Water Delivery	47.5372 (6)	0.09742 (6)	0.7874 (6)	0.4394 (6)	0.2819 (6)			64,561.2 (6)	0.633 (6)	5 (6)	1 (6)
Water Storage	56.7453 (6)	0.175017 (6)	0.8077 (6)	0.4394 (6)	0.4927 (6)			44,676 (6)	0.65 (6)	3.92 (6)	1 (6)

228 Function: water storage
229 Function: water venting
230 Function: process urine
231 Function: process wastewater

References: (1) de Vera (1999); (2) Calculation; (3) MADS (2001); (4) de Vera (1998b); (5) NASA (2001b); (6) Niehuss (2001); (7) NASA (2001c); (8) de Vera (1998a); (9) Perry, *et al.* (2005).
Note: Hardware entries in *italics* are components of assembly entries in **bold** type.

7.3.2 SPACELAB

Table 7.3.7 Spacelab Atmosphere Revitalization Subsystem

Assembly or Component	Mass [kg]	Volume [m³]	Length [m]	Width or Diameter [m]	Height [m]	Peak Power [W]	Operational Average Power [W]	MTBF [h]	CMMTTR [h]	Life Limit [y]	No.
Cabin Fan Assembly [232]	18.96	0.081622	0.4612	0.3027	0.5844	399					1
Cabin Fan	2.7	0.00562	0.1428	0.1868	0.2105		395				2
Check Valve	0.205	0.004299	0.0421	0.1802							2
Debris Trap Filter	0.85	0.001482	0.381	0.2286	0.017						1
Power Factor Corrector	0.93	0.001032	0.1524	0.0889	0.0762		2				1
Carbon Dioxide Control Assembly [233]	24.1 (1)	0.191135 (2)	0.7 (1)	0.635 (1)	0.43 (1)		0.2 (1)				1
Carbon Dioxide Control Assembly [233]	3.06										1
Carbon Dioxide Absorber Element	3.06	0.025968	0.2872	0.1696							1
Humidity and Temperature Control Assembly [234]	19.43	0.078403	0.2529	0.5751	0.5389		0.85				1
Condensing Heat Exchanger	17.77	0.078401	0.2529	0.5751	0.5389		0.85				1
Temperature Control Valve	2.3	0.0272	0.4351	0.2159	0.2895						1
Transfer Tunnel Scrubber [235]	7.2 (3)	0.018 (2)	0.43 (3)	0.23 (3)							
Water Separator Assembly [236]	97.6	0.040714	0.5003	0.3048	0.2669		48				1
Liquid Check Valve	0.055	0.000102	0.0508	0.0254							2
Power Factor Corrector	0.759	0.001032	0.1524	0.0889	0.0762		1				1
Rotary Separator	2.55	0.015127	0.1524	0.1778			43				2

Table 7.3.8 Spacelab Active Thermal Control Subsystem

Assembly or Component	Mass [kg]	Volume [m³]	Length [m]	Width or Diameter [m]	Height [m]	Peak Power [W]	Operational Average Power [W]	MTBF [h]	CMMTTR [h]	Life Limit [y]	No.
Freon Pump Package [237]	22.4	0.044586	0.48	0.2997	0.0988		315				1
Water Pump Package [237]	21.09	0.036565	0.3937	0.2997	0.3098		66				1

[232] Function: intramodule atmosphere circulation
[233] Function: carbon dioxide control
[234] Function: temperature and humidity control
[235] Function: trace contaminant removal. This hardware supports an input airflow rate of 2.5 m³/h.
[236] Function: humidity control
[237] Function: heat removal

References: (1) Dornier; (2) Calculation; (3) Perry (1998), Ray, *et al.* (1979), and Ray and Stanley (1977).
Note: Hardware entries in *italics* are components of assembly entries in **bold** type.

Table 7.3.9 Spacelab Temperature and Humidity Control

Assembly or Component	Mass [kg]	Volume [m³]	Length [m]	Width or Diameter [m]	Height [m]	Peak Power [W]	Operational Average Power [W]	MTBF [h]	CMMTTR [h]	Life Limit [y]	No.
Avionics Fan [238]	20 (1)	0.0516 (2)	0.5 (1)	0.43 (1)	0.24 (1)	670 130 (1) [239]					1
Avionics Heat Exchanger Assembly [238]	15.6 (1)	0.039525 (2)	0.383 (1)	0.43 (1)	0.24 (1)		4,510 (1)				1
Cabin Fan [240]	18.7 (1)	0.126449 (2)	0.85 (1)	0.483 (1)	0.308 (1)		403 (1)				1
Humidity and Temperature Control Assembly [238]	19.4 (1)	0.104147 (2)	0.539 (1)	0.582 (1)	0.332 (1)		51 (1)				1

Table 7.3.10 Spacelab Water Recovery and Management

Assembly or Component	Mass [kg]	Volume [m³]	Length [m]	Width or Diameter [m]	Height [m]	Peak Power [W]	Operational Average Power [W]	MTBF [h]	CMMTTR [h]	Life Limit [y]	No.
Condensate Overboard Dumping Assembly [241]	4.5 (1)	0.00896 (2)	0.4 (1)	0.14 (1)	0.16 (1)		150 (1)				1
Condensate Storage Assembly [242]	9.9 (1)			0.52 (1)							1
Water Separator Assembly [243]	9.8 (1)	0.04272 (2)	0.5 (1)	0.32 (1)	0.267 (1)		48 (1)				1

238 Function: temperature and humidity control
239 The values here are for high-speed and low-speed settings, respectively.
240 Function: intramodule atmosphere circulation
241 Function: water venting
242 Function: water storage
243 Function: process wastewater

References: (1) Dornier; (2) Calculation; (3) Perry (1998), Ray, *et al.* (1979), and Ray and Stanley (1977).
Note: Hardware entries in *italics* are components of assembly entries in **bold** type.

7.3.3 SPACE SHUTTLE PROGRAM

Table 7.3.11 Space Shuttle Atmosphere Revitalization Subsystem

Assembly or Component	Mass [kg]	Volume [m³]	Length [m]	Width or Diameter [m]	Height [m]	Peak Power [W]	Operational Average Power [W]	MTBF [h]	CMMTTR [h]	Life Limit [y]	No.
Ambient Temperature Catalytic Oxidizer [244]	1.5422	0.011163	0.3444	0.1016							1
ARS Instrumentation [245]	1.421										1
Cabin Temperature Controller	4.4452	0.010222	0.2603	0.1849	0.2123		16				1
Carbon Dioxide Partial Pressure Sensor	0.3855	0.000145	0.0635	0.0635	0.1524		0.2				1
Humidity Sensor	0.36 (1)						0.5 (1)				1
IR Carbon Dioxide Sensor	0.6 (1)					2.4 (1)					1
Pressure Sensor	0.25 (1)	0.000291	0.092	0.0317			0.5 (1)				1
Quantity Sensor	0.2268	0.000238	0.064	0.0576	0.0645		0.01				1
Speed Sensor	0.0453	0.000032	0.0254	0.0254	0.0508						1
Temperature Sensor	0.0771	0.000015	0.0731	0.0082							1
Temperature Sensor, Thermistor	0.0407 (1)	0.000054	0.0546	0.0177							1
Water Quantity Sensor	0.17 (1)										1
Avionics Cooling Assembly [246]	12.787	0.056609	0.3556	0.5969	0.2667	185					3
Avionics Check Valve	0.3538	0.007953	0.1041	0.1559							2
Avionics Fan	1.8597	0.010127	0.1388	0.1524		180					2
Avionics Heat Exchanger	6.3957	0.023644	0.353	0.3337	0.2006						1
Signal Conditioner	0.8618	0.002457	0.1778	0.16	0.0863		5				1
Ambient Temperature Catalytic Oxidizer [247]	1.5 (3)	0.002792 (2)	0.3444 (3)	0.1016 (3)							
Beam Assembly [248]	7.9969	0.063857	0.1747	0.6096	0.5994						1
Cabin Air Fan [249]	18.6 (1)	0.038198 (2)	0.4699 (1)	0.3556 (1)	0.2286 (1)	70 (1)	20.5 (1)				1
Cabin Air Fan and Debris Trap Assembly [249]	17.191	0.1914	0.9042	0.3078	0.6876	495					1
Cabin Air Fan	2.6989	0.00562	0.1428	0.1868	0.2105	495					2
Check Valve	0.2041	0.003742	0.0393	0.1734							2
Debris and Filter Trap	0.1134	0.000492	0.2148	0.2148	0.0106						1
Signal Conditioner-ARS	0.9979	0.002465	0.1607	0.1785	0.0858		4				1

244 Function: carbon monoxide control
245 Function: temperature and humidity control
246 Function: heat removal
247 Function: trace contaminant removal. This unit accommodates an input airflow rate of 1.0 ft³/min (1.7 m³/h) with a pressure drop of no more than 0.5 inches of water (0.12 kPa). The unit removes 0.66×10^{-3} kg/d of carbon monoxide. See Perry (1998) for details.
248 Function: equipment mounting
249 Function: intramodule atmosphere circulation

References: (1) SODB (1995); (2) Calculation; (3) Perry (1998).
Note: Hardware entries in *italics* are components of assembly entries in **bold** type.

Table 7.3.11 Space Shuttle Atmosphere Revitalization Subsystem (continued)

Assembly or Component	Mass [kg]	Volume [m³]	Length [m]	Width or Diameter [m]	Height [m]	Peak Power [W]	Operational Average Power [W]	MTBF [h]	CMMTTR [h]	Life Limit [y]	No.
Nitrogen Storage Tank [250]		0.137337 (1)									4
Oxygen Auxiliary Tank [250]		0.13677 (1)									
Carbon Dioxide Absorber and Temperature Control Assembly [251]	17.355	0.258958	0.635	0.6634	0.6146						1
Cabin Temperature Selector	0.2494	0.000585	0.0838	0.0838	0.0833	0.01					1
Carbon Dioxide Absorber Element (with LiOH Canister)	2.903	0.025968	0.2872	0.1696							2
Electric Actuator	0.4989	0.000561	0.1173	0.0627	0.0762	57.5	34.5				1
Temperature Control Valve	2.2952	0.035743	0.4351	0.2402	0.3418						1
Emergency Breathing Provisions [252]	5.6										1
Breathing Regulator	0.1 (1)										1
Oxygen System	5.5 (1)	0.00131 (1)	0.4318 (1)	0.0698 (1)							1
Humidity Control Heat Exchanger Assembly [253]	20.0718	0.092732	0.5384	0.5199	0.3312		0.003				1
Humidity Control Heat Exchanger	19.913	0.092583	0.5384	0.5207	0.3302						1
Signal Conditioner	1.8597	0.004358	0.207	0.207	0.1016		8				1
IMU Fan Assembly [254]	10.9317	0.068252	0.889	0.3556	0.2159		50				1
Check Valve	0.0408	0.000761	0.0447	0.0736							3
Filter	0.0095	0.476538	0.3479	0.6604							1
IMU Fan	2.1273	0.004817	0.2032	0.0889	0.2667						3
IMU Fan Motor	1.1793	0.001389	0.0762	0.0762			50				3
IMU Heat Exchanger	3.2886	0.008117	0.1892	0.2095	0.2047						1
Self Sealing Coupling	0.2268	0.000272	0.0685	0.0355							1
Signal Conditioner	0.9298	0.002464	0.1785	0.1607	0.0858		4				3
Multi-Purpose Heat Exchanger [255]	2.1772	0.005473	0.3131	0.1965	0.0889						1

[250] Function: nitrogen and oxygen storage
[251] Function: carbon dioxide control
[252] Function: emergency equipment
[253] Function: humidity control
[254] Function: intermodule atmosphere circulation
[255] Function: heat removal

References: (1) SODB (1995); (2) Calculation; (3) Perry (1998).
Note: Hardware entries in *italics* are components of assembly entries in **bold** type.

Table 7.3.11 Space Shuttle Atmosphere Revitalization Subsystem (concluded)

Assembly or Component	Mass [kg]	Volume [m³]	Length [m]	Width or Diameter [m]	Height [m]	Peak Power [W]	Operational Average Power [W]	MTBF [h]	CMMTTR [h]	Life Limit [y]	No.
Primary Water Pump Package [256]	14.4879	0.035708	0.4599	0.319	0.2433	239.5					1
Accumulator	2.0412	0.027972	0.2794	0.1785							1
Filter	0.0589	0.00042	0.0599	0.0472							1
Self-Sealing Couplings	0.17	0.000154	0.0762	0.0254							3
Water Bypass Controller	1.7917	0.00598	0.2329	0.2329	0.1102		8				1
Water Bypass Valve	1.2746	0.001839	0.1778	0.1163	0.0889	57.5	34.5				1
Water Pump	1.8824	0.001045	0.1651	0.0683	0.0927		197				2
Water Pump Check Valve	0.9072	0.000488	0.1407	0.0899	0.0386						1
Regenerative Carbon Dioxide Removal System [257]	147 (1)	0.309998 (2)	0.4635 (1)	0.6794 (1)	0.9842 (1)	311 (1)	110 (1)				1
Canister Assembly	42.5 (1)	0.096816 (2)	0.8699 (1)	0.254 (1)	0.4381 (1)						1
Controller	8.8 (1)	0.014984 (2)	0.164 (1)	0.3238 (1)	0.2819 (1)						2 (1)
Crew Setting Valve	0.5 (1)	0.000514 (2)	0.0787 (1)	0.1186 (1)	0.0551 (1)						1 (1)
Fan	2.13 (1)	0.004817 (2)	0.2032 (1)	0.0889 (1)	0.2667 (1)		56 (1)				1 (1)
Inlet Muffler and Filter											1 (1)
Odor Filter: Charcoal, Shell Cartridge, Cloth Liner	2.5 (1)	0.011328 (1)		0.1696 (1)	0.287 (1)					0.0246575 (1)	1
Outlet Muffler	0.35 (1)			0.0762 (1)	0.3556 (1)						1 (1)
Pressure Equalization Valve	0.73 (1)			0.0508 (1)	0.1422 (1)						6 (1)
System Sensors											1 (1)
Ullage Save Compressor	6.21 (1)	0.005649 (2)	0.1143 (1)	0.1955 (1)	0.2527 (1)	250 (1)	180 (1)				1 (1)
Vacuum Cycle Valve (VCV)	1.23 (1)	0.001364 (2)	0.1056 (1)	0.1104 (1)	0.1168 (1)						2 (1)
Vacuum Cycle Valve Actuator	0.89 (1)	0.000469 (2)	0.0736 (1)	0.0533 (1)	0.1193 (1)						2 (1)
Secondary Pump and Accumulator Assembly [258]	12.6735	0.035708	0.4599	0.319	0.2433	239.5					1
Water Separator Assembly [259]	7.8472	0.024189	0.2656	0.448	0.2032						1
Fan / Separator	2.5401	0.015127	0.1524	0.1778		43					2
Fan / Separator Motor	1.0659	0.001389	0.0762	0.0762		40					1
Gas Check Valve	0.009	0.000145	0.0276	0.0408							2
Liquid Check Valve	0.0498	0.000102	0.0508	0.0254							2
Signal Conditioner	0.9208	0.002464	0.1785	0.1607	0.0858	4					1

256 Function: temperature control
257 Function: carbon dioxide control. This is experimental equipment for a Detailed Test Objective and not part of the basic Shuttle atmosphere revitalization equipment complement.
258 Function: temperature control
259 Function: humidity control

References: (1) SODB (1995); (2) Calculation; (3) Perry (1998).
Note: Hardware entries in *italics* are components of assembly entries in **bold** type.

Table 7.3.12 Space Shuttle Airlock Support Subsystem

Assembly or Component	Mass [kg]	Volume [m³]	Length [m]	Width or Diameter [m]	Height [m]	Peak Power [W]	Operational Average Power [W]	MTBF [h]	CMMTTR [h]	Life Limit [y]	No.
LCVG Heat Exchanger [260]		0.001966 (2)	0.0762 (1)	0.2032 (1)	0.127 (1)						

Table 7.3.13 Space Shuttle Active Thermal Control Subsystem

Assembly or Component	Mass [kg]	Volume [m³]	Length [m]	Width or Diameter [m]	Height [m]	Peak Power [W]	Operational Average Power [W]	MTBF [h]	CMMTTR [h]	Life Limit [y]	No.
Ammonia Boiler Subsystem [261]		0.346881 (2)	1.0668 (1)	0.6096 (1)	0.5334 (1)						1
Cold Plates											1
Evaporator / Control		0.224028 (2)	0.5334 (1)	0.5334 (1)	0.7874 (1)						1 (1)
Flash Evaporator Subsystem Water Accumulator			0.1676 (1)	0.0914 (1)							1 (1)
Flash Evaporation Assembly [261]	26.2543	0.130535	0.5461	0.4953	0.4826	200					1
Evaporator	7.4844	0.149054	0.4191	0.3365							2
Flash Evaporator Controller	1.7463	0.001769	0.1524	0.1524	0.0762		8				1
Flash Evaporator, Controller No.3	1.7463	0.001769	0.1524	0.1524	0.0762		9				1
High Load Duct Assembly	10.9										1
High Load Valve / Nozzle Assembly	0.4989	0.00043	0.0889	0.0762	0.0635		35				1
Nozzle Heater	0.254		0.3048				25				1
Sonic Nozzle Assembly	1.2247	0.015217	0.1778	0.1651			25				1
Topping Duct Assembly	25.7191										1
Topping Valve / Nozzle Assembly	0.5443	0.000399	0.0825	0.0762	0.0635		35				1
Flow Proportioning Module [261]	1.7236	0.004244 (2)	0.1778 (1)	0.1016 (1)	0.2495 (1)	57.5	34.5				1
Flow Proportioning Valve		0.004244	0.1778	0.1016	0.2495						2
Flow Sensor	0.7484	0.001721	0.1778	0.0645	0.1501		0.84				2
Signal Conditioner	2.0865	0.004034	0.1656	0.1498	0.1625		10				1
Freon Pump Package, Single Pumps [261]	19.0466	0.0854 (2)	0.7226 (1)	0.3276 (1)	0.3606 (1)	360					2
Check Valve	1.8144			0.019							1
Filter	0.136	0.000106	0.1016	0.0182							1
Freon Accumulator	10.8864	0.238894	0.6913	0.3317							1
Freon Pump	1.769	0.001585	0.2006	0.0889	0.0889	360					1
Freon Pump Package, Two Pumps [261]	20.294	0.0854 (1)	0.7223	0.3276	0.3606	360					2
Freon To Water Interchanger [261]	14.3791	0.023819 (2)	0.7467 (1)	0.2616 (1)	0.1219 (1)						1
Fuel Cell Heat Exchanger [261]	7.6114	0.010406 (2)	0.4114 (1)	0.2032 (1)	0.1244 (1)		0.002				1

260 Function: temperature and humidity control
261 Function: heat removal

References: (1) SODB (1995); (2) Calculation; (3) Perry (1998).
Note: Hardware entries in *italics* are components of assembly entries in **bold** type.

Table 7.3.13 Space Shuttle Active Thermal Control Subsystem (continued)

Assembly or Component	Mass [kg]	Volume [m³]	Length [m]	Width or Diameter [m]	Height [m]	Peak Power [W]	Operational Average Power [W]	MTBF [h]	CMMTTR [h]	Life Limit [y]	No.
Ground Support Equipment Heat Exchanger [262]		0.007039 (2)	0.3429 (1)	0.1879 (1)	0.1092 (1)						1
Hydraulics Heat Exchanger [262]	11.1132	0.020808 (2)	0.4699 (1)	0.2614 (1)	0.1676 (1)						
Payload Heat Exchanger [262]	19.6408	0.013225 (2)	0.5359 (1)	0.2159 (1)	0.1143 (1)						1
Radiator System [262]											
Water Boiler, Thermal Control, Hydraulic	71.6824	0.345493	0.8636	0.7874	0.508	150	100				3
Heater	0.1134	0.000032	0.2984	0.085	0.0012		14.7-31.7				1
Hydraulic Pressure Relief Valve	1.134	0.000201	0.1041	0.0762	0.0254						1
Water Boiler	33.0493	0.096167	0.4445	0.3111	0.6953						1
Water Shutoff Valve	0.6441	0.000225	0.1082	0.0482	0.0431		50				1
Water Spray Boiler Controller	4.3092	0.009107	0.1134	0.2413	0.3302		42				1
Water Tank	5.4432	0.258479	0.6906	0.3589							1
Water Spray Boiler Subsystem [262]	82.4644	0.388839	0.4826	1.0226	0.7879						3
Electrical Heater-1	0.2177						51				1
Electrical Heater-2	0.0453						33.5				1
Electrical Heater-3	0.0453						11.5				1
Hydraulic Bypass Relief Valve	4.8399	0.004144	0.3357	0.1468	0.084	57.5	34.5				1
Liquid Level Sensor	0.1134	0.00005	0.0508	0.0177		0.3					1
Liquid Level Sensor Electronics	0.068	0.000506	0.0571	0.0698	0.127						1
Nitrogen Regulator	0.6804	0.000644	0.0967	0.0873	0.0762						1
Nitrogen Shutoff Valve	0.6804	0.000558	0.1135	0.0787	0.0624		50				1
Nitrogen Storage Tank	0.9072	0.016351		0.1574							1
Spray Boiler	21.5097	0.0482	0.6985	0.3959	0.2032						1
Steam Dump Nozzle	2.1772	0.01681	0.1905	0.1676			51				1
Water Supply Valve	0.5307	0.000617	0.1097	0.0805	0.0698		50				1
Water Tank for Water Spray Boiler	21.4099	0.111143	0.7409	0.4051	0.3708						1

Table 7.3.14 Space Shuttle Water Recovery and Management

Assembly or Component	Mass [kg]	Volume [m³]	Length [m]	Width or Diameter [m]	Height [m]	Peak Power [W]	Operational Average Power [W]	MTBF [h]	CMMTTR [h]	Life Limit [y]	No.
Potable Water Tank [263]	3.3 (1)										1
Wastewater Tank [263]	3.3 (1)										1

[262] Function: heat removal
[263] Function: water storage

References: (1) SODB (1995); (2) Calculation; (3) Perry (1998).
Note: Hardware entries in *italics* are components of assembly entries in **bold** type.